INSTRUCTIONS
ALED® HOUSE SIDE SHIELD INSTALLATION

RAB Lighting is committed to creating high-quality, affordable, well-designed and energy-efficient LED lighting and controls that make it easy for electricians to install and end users to save energy. We'd love to hear your comments. Please call the Marketing Department at 888-RAB-1000 or email: marketing@rablighting.com


ALEDSHS


ALEDMHS

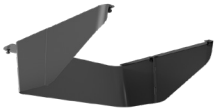
ALEDLHS

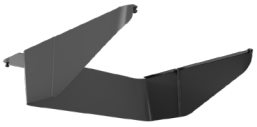
ALEDXLHS

IMPORTANT

READ CAREFULLY BEFORE INSTALLING FIXTURE. RETAIN THESE INSTRUCTIONS FOR FUTURE REFERENCE.
RAB fixtures must be wired in accordance with the National Electrical Code and all applicable local codes. Proper grounding is required for safety. THIS PRODUCT MUST BE INSTALLED IN ACCORDANCE WITH THE APPLICABLE INSTALLATION CODE BY A PERSON FAMILIAR WITH THE CONSTRUCTION AND OPERATION OF THE PRODUCT AND THE HAZARDS INVOLVED.
WARNING: Make certain power is OFF before installing or maintaining fixture. No user serviceable parts inside.

INSTALLATION

ALED House Side Shield can be mounted to **Fixture** using **Shield Back Panel** only or **Shield Back Panel** with **Side Panels**.
Note: ALEDSHS and ALEDMHS are reversible, ALEDLHS and ALEDXLHS are not reversible.

1. For **ALEDS** and **ALEDM** assemble **Shield** as shown in Fig.1, insert **Side Panel Tabs** into **Back Panel Slots** and push down to secure.
2. Remove *(4)* corner **Fixture Screws**, mount **Shield** onto **Fixture** and secure with *(4)* **Knurled Screws** *(provided)* as shown in Fig 2. If not using **Side Panels** remove *(2)* back corner **Screws** as shown in Fig. 3 and secure **Back Panel** with *(2)* **Knurled Screws** *(provided)*.
4. For **ALEDL** and **ALEDXL** assemble **Shield** as shown in Fig. 1, insert **Side Panel Tabs** into **Back Panel Slots** and push down to secure.
5. Remove *(6)* **Fixture Screws** as shown in Fig. 4, mount **Shield** onto **Fixture** and secure with *(6)* **Knurled Screws** *(provided)* as shown in Fig. 4. If not using **Side Panels** remove back **Fixture Screws** *(4)* as shown in Fig. 5 and secure **Back Panel** with *(4)* **Knurled Screws** *(provided)*.

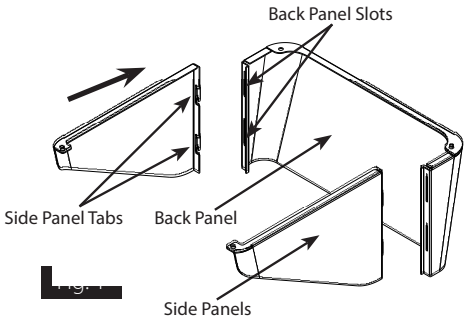

Fig: 1

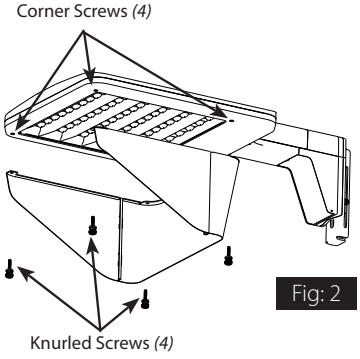

Fig: 2

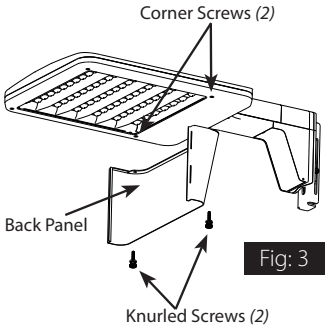

Fig: 3

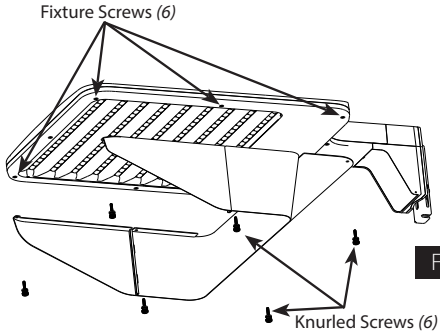

Fig: 4

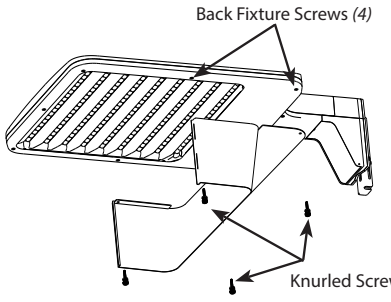

Fig: 5

© 2023 RAB LIGHTING Inc.

ALED HOUSE SIDE SHIELD
IN - 0723
P-100370

RAB WARRANTY: *RAB's warranty is subject to all terms and conditions found at rablighting.com/warranty.*