INSTRUCTIONS
FIELD-ADJUSTABLE ALED® INSTALLATION

RAB Lighting is committed to creating high-quality, affordable, well-designed and energy-efficient LED lighting and controls that make it easy for electricians to install and end users to save energy. We'd love to hear your comments. Please call the Marketing Department at 888-RAB-1000 or email: marketing@rablighting.com



Universal Pole Mount



Wall Mount



Slipfitter Mount

IMPORTANT

READ CAREFULLY BEFORE INSTALLING FIXTURE. RETAIN THESE INSTRUCTIONS FOR FUTURE REFERENCE.
RAB fixtures must be wired in accordance with the National Electrical Code and all applicable local codes. Proper grounding is required for safety. THIS PRODUCT MUST BE INSTALLED IN ACCORDANCE WITH THE APPLICABLE INSTALLATION CODE BY A PERSON FAMILIAR WITH THE CONSTRUCTION AND OPERATION OF THE PRODUCT AND THE HAZARDS INVOLVED.
WARNING: Make certain power is OFF before installing or maintaining fixture. No user serviceable parts inside.
Universal voltage driver permits operation 120V through 277V, 50 or 60 Hz. Units ordered with /480 suffix are 480V only.
Suitable for wet locations.

FIELD ADJUSTMENT

Follow instructions below to change the Fixture Power *(W)* from factory settings:

Factory Settings:

ALEDS 80/60/40W	80W
ALEDS AMBER 60/40W	60W
ALEDM 150/90/78W	150W
ALEDM AMBER 90/78W	90W
ALEDL 260/220/170W	260W
ALEDXL 385/345/300W	385W

1. Locate the FA Switch Cover on the Fixture as shown in Fig. 1.
2. Pop up the FA Switch Cover.
3. Select Power *(W)* by sliding Power *(W)* Selector Switch to the desired value *(Fig. 2)*.
4. Push FA Switch Cover back in place to secure.

Fig: 1

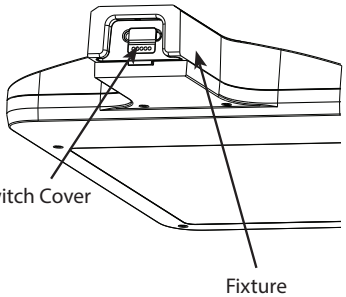

Fig: 2

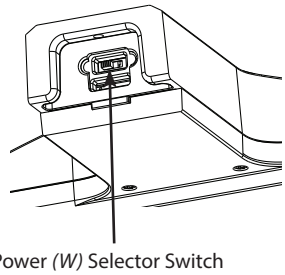

ASSEMBLE MOUNTING ARM ON FIXTURE
(SUITABLE FOR ALL MOUNTING OPTIONS)

1. Line up Mounting Arm with Fixture *(Fig. 3)* and feed wires from the Fixture into the Mounting Arm.
   Note*: For ALEDXL Square Pole and Round Pole Mount (only), line up Mounting Arm with Fixture (Fig. 3a) and feed wires and Tether Cable from the Fixture into the Mounting Arm.*
2. Slide Fixture onto Mounting Arm while ensuring wiring is not pinched between Mounting Arm and Fixture.
3. Assemble Lock Washer to Mounting Bolt and place into Mounting Hole. Secure by tightening Mounting Bolt.

Fig: 3

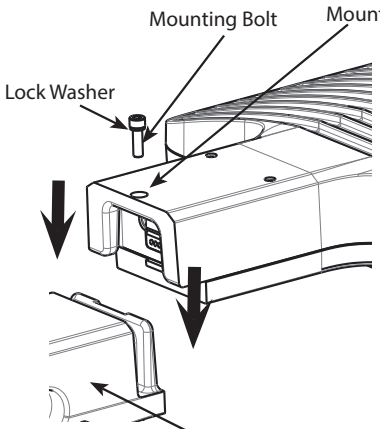

Fig: 3.a

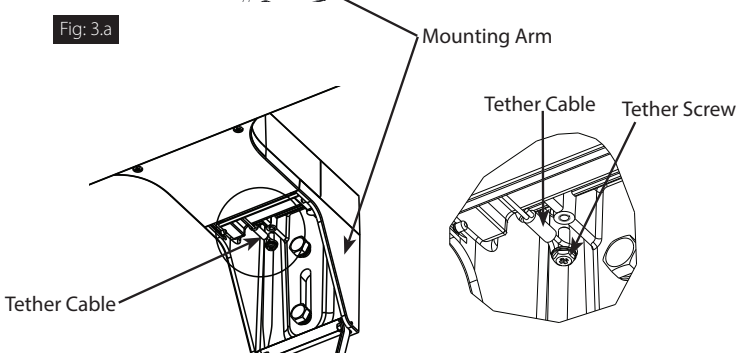

INSTRUCTIONS
FIELD-ADJUSTABLE ALED® INSTALLATION

RAB Lighting is committed to creating high-quality, affordable, well-designed and energy-efficient LED lighting and controls that make it easy for electricians to install and end users to save energy. We'd love to hear your comments. Please call the Marketing Department at 888-RAB-1000 or email: marketing@rablighting.com

SQUARE POLE BRACKET MOUNT

1. Remove **Round Pole Adaptor** *(RPA)* and **RPA Gasket** *(Fig. 4)*.
2. Place the **Bolster Plate** inside the **Pole**.
3. Align the **Mounting Arm** with the holes on the **Pole**.
4. Feed supply wires from the **Pole** into the **Mounting Arm** *(Fig. 3)*. **Note***: For ALEDXL (only) line up Mounting Arm with Fixture and feed wires and Tether Cable from the Fixture into the Mounting Arm, secure Tether Cable with Tether Screw (Fig. 3a)*
5. Place **Flat Washers** and **Lock Washers** on **3/8-16 Bolts**.
6. Insert **3/8-16 Bolts** through **Mounting Arm** and **Pole** and thread into **Bolster Plate**.
7. Tighten **Bolts**.

Fig: 4

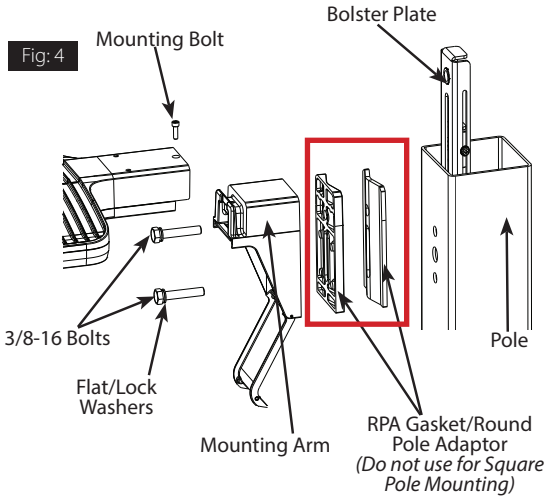

ROUND POLE BRACKET MOUNT

1. Place **Round Pole Adaptor** *(RPA)* and **RPA Gasket** between the **Fixture** and drilled **Pole** as shown in Fig. 5.
2. Align the **Mounting Arm**, **RPA** and **RPA Gasket** with the holes on the **Pole**.
3. Feed supply wires from the **Pole** through the **Mounting Arm**. **Note***: For ALEDXL (only) line up Mounting Arm with Fixture and feed wires and Tether Cable from the Fixture into the Mounting Arm, secure Tether Cable with Tether Screw (Fig. 3a)*.
4. Insert **3/8-16 Bolts** through **Mounting Arm**, **RPA**, **Gasket** and **Pole** and thread into **Bolster Plate**.
5. Tighten **Bolts**.

Fig: 5

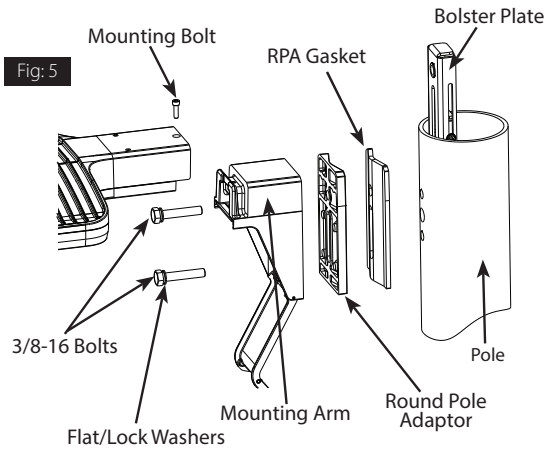

POLE DRILLING DETAIL

Dimensions of the holes on the RPA and Bracket.
This template is not to scale. Please use measurements shown in Fig. 6.

Fig: 6

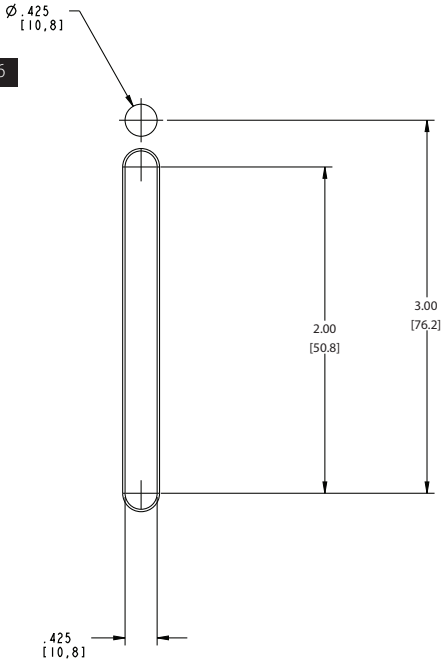

INSTRUCTIONS
FIELD-ADJUSTABLE ALED® INSTALLATION

RAB Lighting is committed to creating high-quality, affordable, well-designed and energy-efficient LED lighting and controls that make it easy for electricians to install and end users to save energy. We'd love to hear your comments. Please call the Marketing Department at 888-RAB-1000 or email: marketing@rablighting.com

WALL MOUNT

1. Separate **Wall Mount Cover** from **Wall Mount Box** *(Fig. 7)*. Mount the **Fixture** onto the **Wall Mount Cover** *(see Fig. 3)*.
2. Orient **Wall Mount Box** so that **"TOP" Arrow** is facing up as shown in Fig. 8.
3. Secure **Wall Mount Box** to a sturdy wall. Make sure **Wall Mount Box Gasket** is in place. Use appropriate mounting hardware such as lag bolts and anchors with washers *(not provided)* suitable for the mounting surface.
4. Silicone around the edge of the **Wall Mount Box Gasket** and/or **Junction Box**.
5. Bring **Fixture** up to the **Wall Mount Box** and slide the stainless-steel **Tether** from inside the **Wall Mount Cover** into the **Keyhole Slot** *(Fig. 8)* for hands free wiring.
6. Feed supply wires through **Wall Mount Box** and wire the **Fixture** using suitable wire connectors.
7. Check that the **Wall Mount Cover Gasket** is secure between the **Wall Mount Box** and **Wall Mount Cover.** Secure the **Wall Mount Box** to **Wall Mount Cover** using *(4)* **Set Screws** *(provided)*.
8. **TIGHTEN ALL CLOSE UP PLUGS AND APPLY WEATHERPROOF SILICONE SEALANT TO ALL UNUSED CONDUIT ENTRY POINTS. ALSO USE SEALANT BETWEEN THE WALL AND WALL MOUNT BOX. THIS IS ESPECIALLY IMPORTANT WITH AN UNEVEN WALL SURFACE.**

Fig: 7

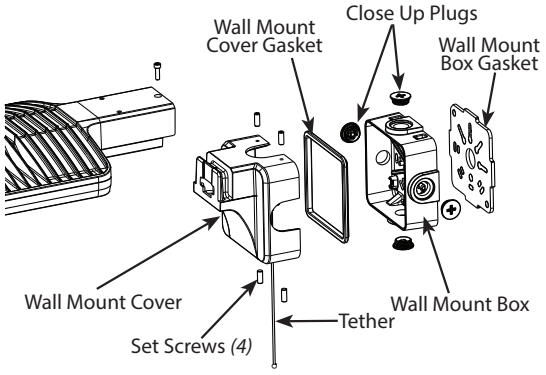

Fig: 8

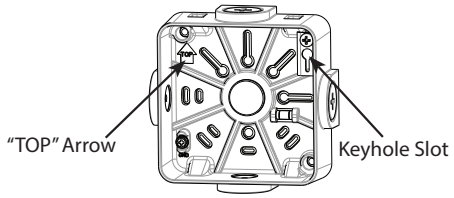

SLIPFITTER MOUNT

WARNING: RISK OF SERIOUS INJURY OR DEATH!
DO NOT MOUNT THE SLIPFITTER TO A TENON OR BRACKET THAT IS MORE THAN 20 DEGREES FROM VERTICAL. MOUNTING ANY ANGLE OTHER THAN 0-20 DEGREES INCREASES THE RISK OF DISENGAGEMENT AND/OR FAILURE OF THE SLIPFITTER. INSTALL THE POLE ON A SECURE BASE OR INSTALL THE BRACKET TO A WALL FIRST, THEN PLACE LUMINAIRE ONTO THE POLE OR BRACKET. DO NOT LIFT ASSEMBLED LUMINAIRE OR POLE OR LUMINAIRE & BRACKET. LUMINAIRE OR POLE/BRACKET MAY DISENGAGE.

1. The **Slipfitter** fits a 2 3/8" O.D. **Tenon**. Place the **Slipfitter** over the **Tenon** and secure the **Fixture** with **Set Screws** on the side of the **Slipfitter** *(Fig. 9)*.
2. Feed wires from **Fixture** through **Slipfitter** and connect supply wires from **Pole**. Make the necessary connections and knot wires for strain relief.
3. To adjust the angle of the **Slipfitter** loosen the **Locking Bolt** and swivel **Fixture** to desired angle.
4. Tighten the **Locking Bolt**.

Fig: 9

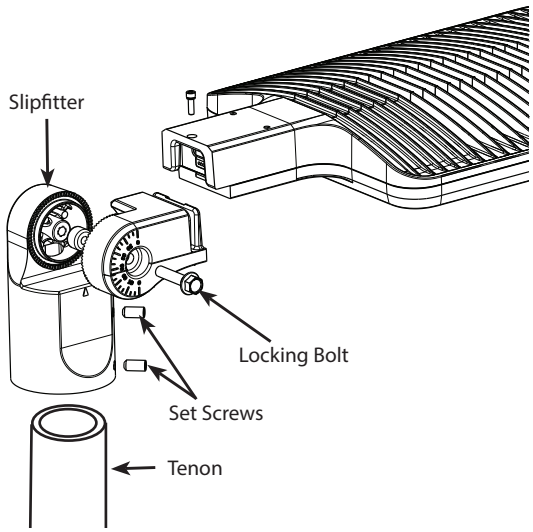

INSTRUCTIONS
FIELD-ADJUSTABLE ALED® INSTALLATION

RAB Lighting is committed to creating high-quality, affordable, well-designed and energy-efficient LED lighting and controls that make it easy for electricians to install and end users to save energy. We'd love to hear your comments. Please call the Marketing Department at 888-RAB-1000 or email: marketing@rablighting.com

ACCESSORIES

- **ALEDSHS** - House Side Shield ALEDS
- **ALEDMHS** - House Side Shield ALEDM
- **ALEDLHS** - House Side Shield ALEDL
- **ALEDXLHS** - House Side Shield ALEDXL

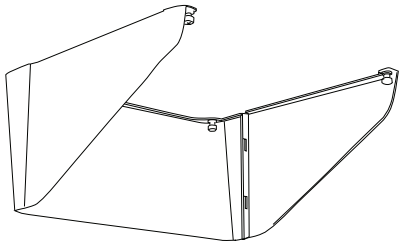

CLEANING & MAINTENANCE

CAUTION: Be sure fixture temperature is cool enough to touch. Do not clean or maintain while fixture is energized.

1. Clean polycarbonate lens with non-abrasive glass cleaning solution.
2. Do not open the fixture to clean the LED. Do not touch the LED.

TROUBLESHOOTING

1. Check that the line voltage at the fixture is correct. Refer to wiring directions.
2. Is the fixture grounded properly?

0-10V DIMMABLE WIRING

Universal voltage driver permits operation at 120V through 277V, 50 or 60 Hz. Units ordered with */480* suffix are 480V only. For 0-10V dimming follow the wiring directions as shown in Fig. 10.

1. Connect the black fixture lead to the (+) **LINE** supply lead.
2. Connect the white fixture lead to the (-) **COMMON** supply lead.
3. Connect the **GROUND** wire from fixture to supply ground. Do NOT connect the **GROUND** of the dimming fixture to the output.
4. Connect the purple fixture lead to the (V+) DIM lead.
5. Connect the pink fixture lead to the (V-) DIM lead.
6. Cap the yellow fixture lead, if present. Do NOT connect.

Fig: 10

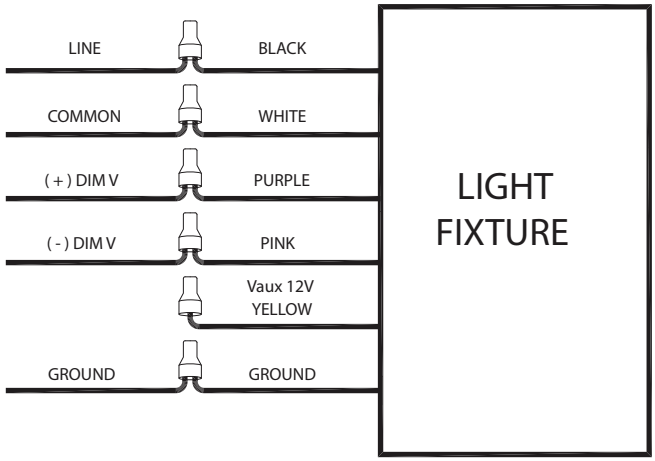

Note: *These instructions do not cover all details or variations in equipment nor do they provide for every possible situation during installation, operation or maintenance.*

© 2023 RAB LIGHTING Inc.

ALED S-M-L-XL - IN - 0723
P-100109-RAB

Easy Answers

rablighting.com
Visit our website for product info

Tech Help Line
Call our experts: 888 722-1000

e-mail
Answered promptly - sales@rablighting.com

Free Lighting Layouts
Answered online or by request

RAB WARRANTY: *RAB's warranty is subject to all terms and conditions found at rablighting.com/warranty.*