CD34STEM-W

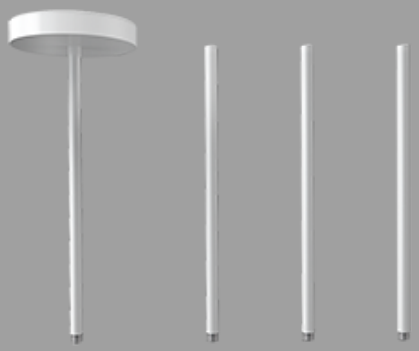

Color: White

Weight: 0.7 lbs

Project:	Type:
Prepared By:	Date:

Technical Specifications

Performance

Description:
Flexible pendant accessory includes (4)-12" stems that can be easily connected to extend the pendant length.

Product Type:
Economy Cylinder Accessory

Construction

Size:
4x 12" Stems

Shape:
Linear

Finish:
Formulated for high durability and long-lasting color

Housing Material:
Aluminum extrusion

Other

Compatible Products:
Compatible with CD34 Field Adjustable Cylinders

Buy American Act Compliance:
RAB values USA manufacturing! Upon request, RAB may be able to manufacture this product to be compliant with the Buy American Act (BAA). Please contact customer service to request a quote for the product to be made BAA compliant.

Copyright © 2024 RAB Lighting All Rights Reserved Note: Specifications are subject to change at any time without notice

Dimensions

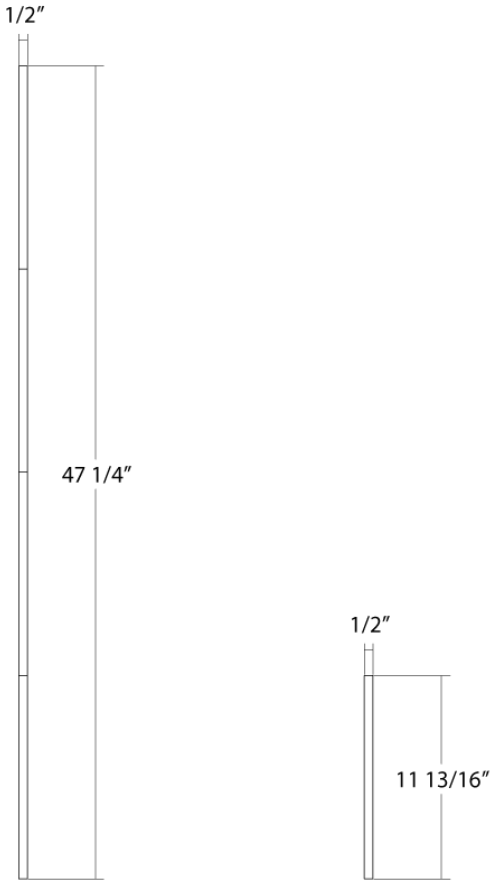

Copyright © 2024 RAB Lighting All Rights Reserved Note: Specifications are subject to change at any time without notice