INSTALLATION INSTRUCTIONS

CAUTION: For safety and proper operation, read and follow instructions carefully before installation.

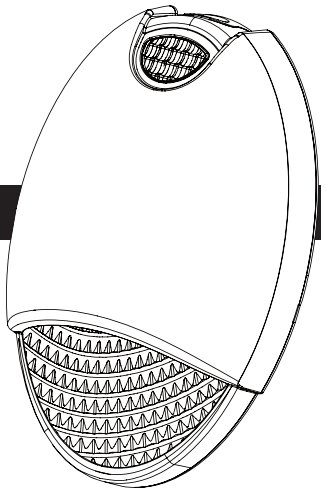

LED Wet Location Indoor / Outdoor
Normally-On / Emergency Unit

IMPORTANT SAFEGUARDS

READ AND FOLLOW ALL SAFETY INSTRUCTIONS

SAVE THESE INSTRUCTIONS AND DELIVER TO OWNER AFTER INSTALLATION

When using electrical equipment, basic safety precautions should always be followed including the following:

- To avoid the possibility of electric shock, turn off power supply before installation or servicing.
- Review the diagrams thoroughly before installation.
- All electrical connections must be in accordance with the NEC and local codes. A qualified electrician should do all the work.
- Do not let power supply cords touch hot surfaces.
- Do not mount near gas or electric heaters.
- Equipment should be mounted in locations where it will not be readily subject to tampering by unauthorized personnel.
- The use of accessory equipment not recommended by the original manufacturer may cause an unsafe condition.
- Do not use this equipment for other than intended use.
- All servicing should be performed by qualified personnel only.

NOTE: Allow battery to charge for 24 hours before first use.

SURFACE MOUNTING

1. Separate front cover from back plate with a flat blade screwdriver. Open from top slot first and then from side slots gently (see Figure 2)
2. Remove knock out hole in the center of the back plate. Remove knock out slots on the back plate that correspond to the size of the junction Box.
3. Feed AC supply leads through the center hole in the back plate. Then make the proper electrical connections. See electrical connections section for proper instructions. Cap off unused hot lead.
4. Mount back plate to junction box with provided #8-32×0.875” screws (see Figure 1).
5. Attach battery connector and power connector.
6. Attach front cover to back plate (securely snaps into place).
7. Supply power and test the unit.

SURFACE CONDUIT FEED

1. Separate front cover from back plate with a flat blade screwdriver. Open from top slot first and then from side slots gently (see Figure 2).
2. Unscrew the pipe plug from top of back plate.
3. Secure back plate to wall. Feed conduit into conduit entry opening (see Figure 3). Secure with appropriate hardware (not provided).
4. Make the proper supply lead connections. See Electrical connections section for proper instructions. Cap off unused hot lead.
5. Attach battery connector and power connector.
6. Attach front cover to back plate.
7. Supply power and test the unit.

SAVE THESE INSTRUCTIONS!

INSTALLATION INSTRUCTIONS

SURFACE MOUNTING

Fig 1

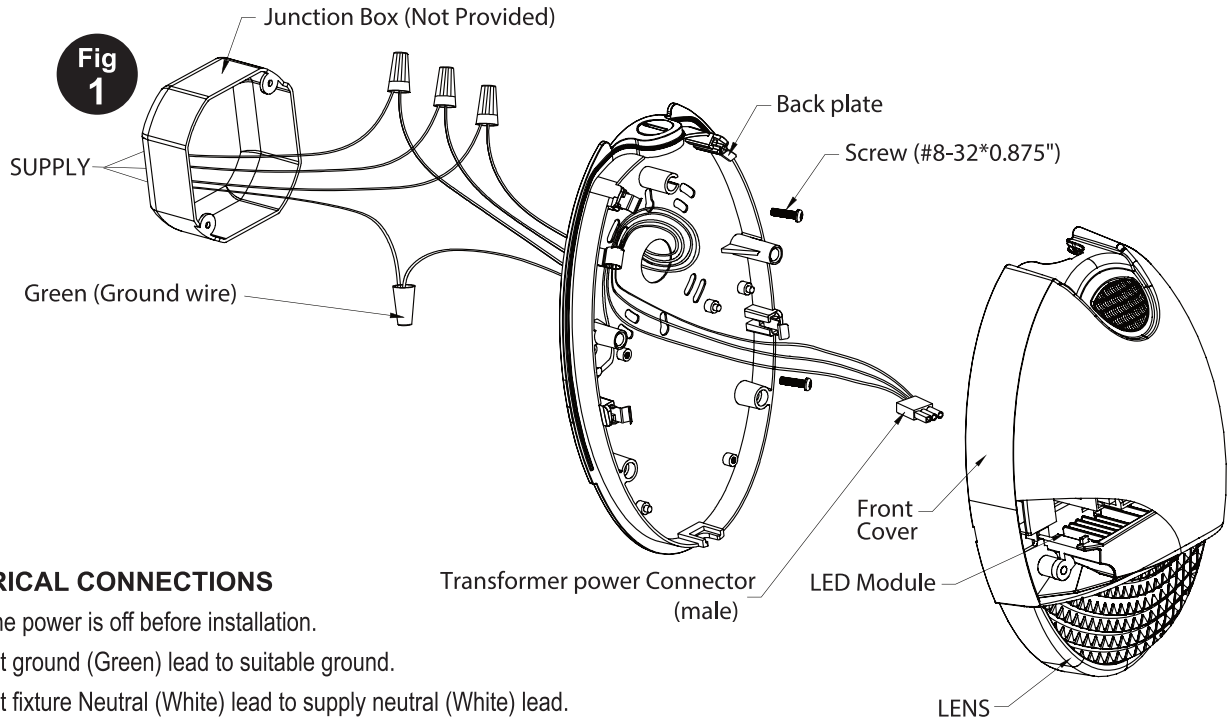

ELECTRICAL CONNECTIONS

1. Verify the power is off before installation.
2. Connect ground (Green) lead to suitable ground.
3. Connect fixture Neutral (White) lead to supply neutral (White) lead.
4. Connect hot lead (Orange) to supply hot lead, 120 to 277 Vac.
5. Connect switch (Red) wire as required for operating fixture. As Required:
   (a) Normally On - Connect Red wire to orange wire for fixture to be on in AC and emergency mode (see Fig. 4).
   (b) Normally Off - Do not connect Red wire, cap off. Unit will only come on during emergency mode (see Fig. 5).
   (c) Switched - Connect Red wire to switch leg of the device that will be controlling the fixture. Unit can be switched on and off. Unit will come on in emergency mode no matter what position the switch device is in (see Fig. 6).
   (d) Photo Sensor Option - Cap-off the red wire. The photo sensor will be connected directly to the board (see Fig. 7).

NOTE: If photo sensor option is not provided, a jumper will be installed in place of the photo sensor.

Fig 2

OPENING FRONT COVER

Open from top slot first then side slot

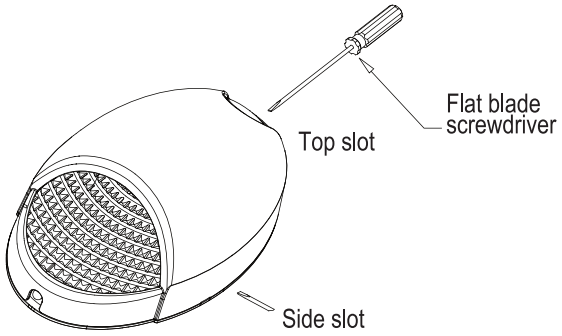

NOTICE-Use flat blade screwdriver to open. Insert screwdriver in the slot (one on the top, two on the sides) and gently pry off the cover.

SURFACE MOUNTED CONDUIT

Fig 3

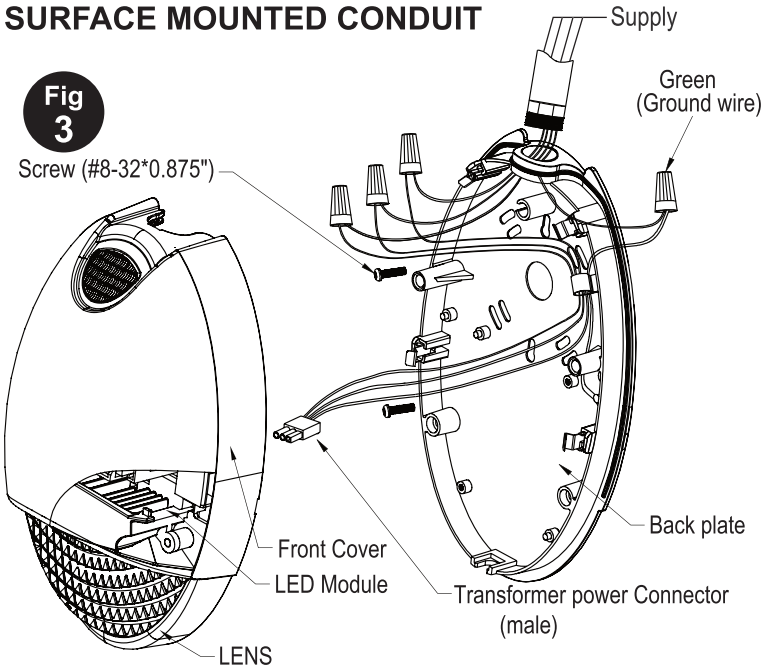

INSTALLATION INSTRUCTIONS

NORMALLY ON

Fig 4

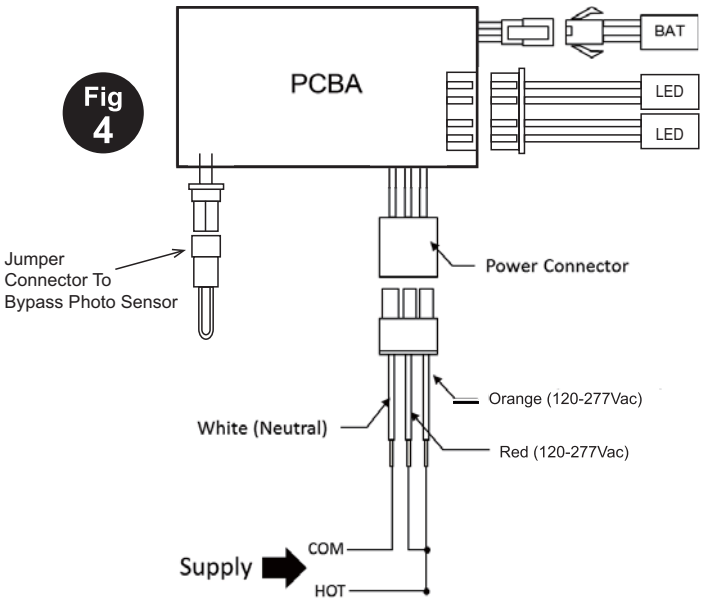

NORMALLY OFF

Fig 5

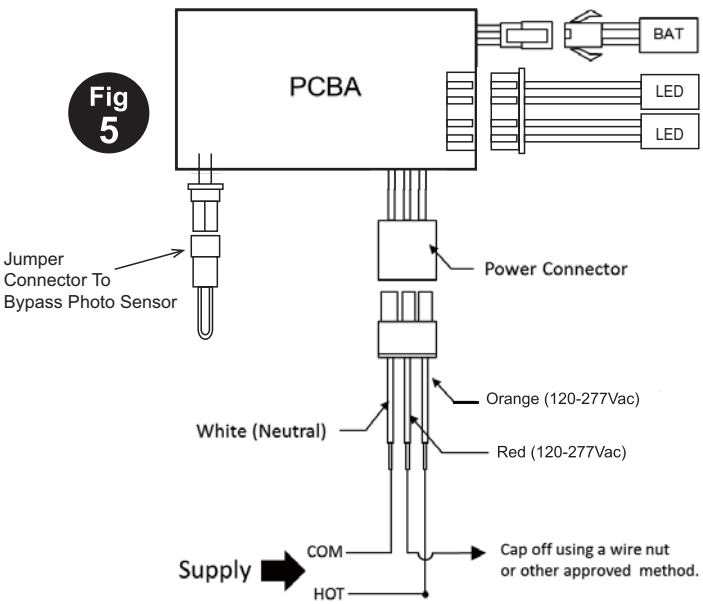

SWITCHED

Fig 6

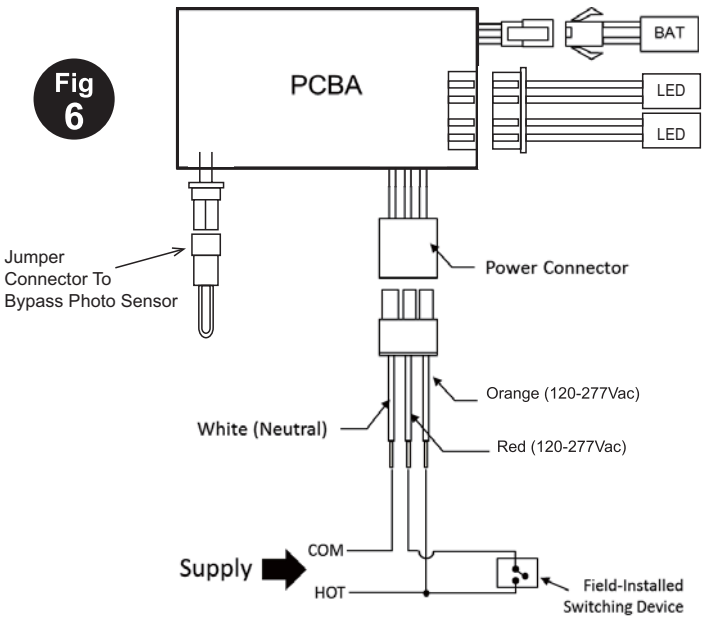

PHOTO SENSOR

Fig 7

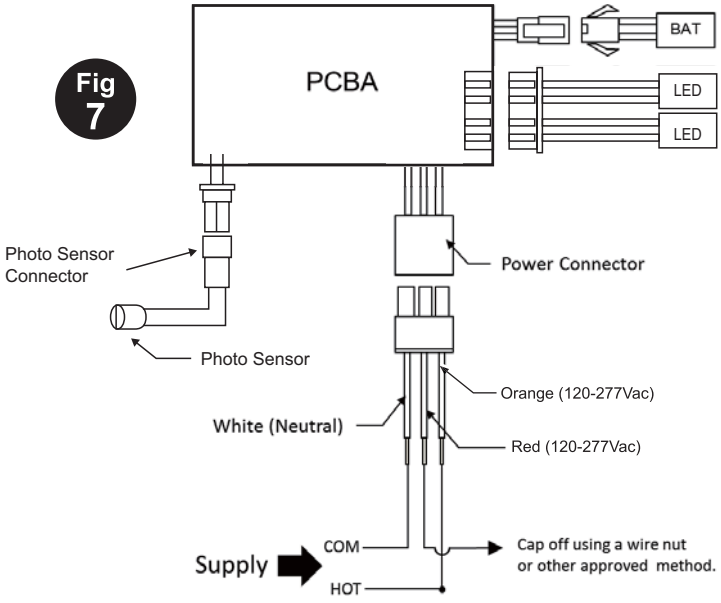

SAVE THESE INSTRUCTIONS!

INSTALLATION INSTRUCTIONS

INSTRUCTIONS FOR SELF-DIAGNOSTIC TEST:

Once the unit is properly installed according to the ins tallation instruction sheet and AC power supplied, the dual color LED indicator will come ON and the self-diagnostic test function will automatically initiate. The LED indicates the unit's status. A STEADY GREEN LED indicates normal service; FLASHING GREEN indicates the unit is testing; GREEN/RED FLASHING indicates the battery is charging; RED (in different combinations) would indicate a service alert. Refer to the SERVICE INDICATION chart below for more details. The LED would be OFF when the unit is in emergency mode.

SELF-DIAGNOSTIC SERVICE

The self-diagnostic function is factory preset and performs the following:

a. Monitoring of battery, battery charger, and lamps.

b. Self-testing and a 30-second or longer discharge once every 30 days, after AC power has been supplied for a minimum of 24 hrs.

c. Self-testing and a 30-minute or longer discharge once every 180 days, after AC power has been supplied for a minimum of 24 hrs.

d. Self-testing and a 90-minute discharge once every 365 days, after AC power has been supplied for a minimum of 24 hrs.

SERVICE INDICATION

LED Indicator	Status
One Flash Red	Replace Electronics
Two Flash Red	Replace Battery
Four Flash Red	Replace lamp head board
Steady Red	Battery Disconnected
Solid Green	Trickle Charge
Flashing Green	In Test
Red/Green Flashing	High Charge

MANUAL TESTING

The unit also provides for manual testing by pushing the test button in a specific pattern.

Action	Reaction & LED Indication
Push test button Once (within 2 seconds)	30-second test: FLASHING Green
Push test button Twice (within 2 seconds)	30-minute test: Green FLASHING twice
Push test button Three times (within 2 seconds)	90-minute test: Green FLASHING three times
Push test button and hold for 3 seconds (In test mode)	Cancels test. If self-test is cancelled it is recommended that a manual test of the same duration be performed at a more convenient time to ensure compliance
Push test button and hold for 6 seconds (In test mode)	System reset

WARNING:

a) Make sure that power is OFF before making any electrical connections.

b) Unused wires must be capped using enclosed wire nuts.