EREMOTEOUT



Color: Gray

Weight: 1.8 lbs

Project:	Type:
Prepared By:	Date:

Technical Specifications

Performance

Product Type:
Emergency Unit, Remote Head

Description:
Outdoor Thermoplastic Remote Double Head

Lumens:
45lm

Lumens (per fixture):
90lm

Electrical

Input Voltage:
Multi-Volt (3.6V,9.6V,6V,12V)

Dual Voltage Circuit Operation:
No

Operating Temperature:
-22°F to 122°F (30°C to 50°C)

Self Diagnostics:
No, manual test only

Remote Test Switch:
No

Installation

Mounting Method:
Back

Mounting Type:
Wall Mount

Maximum Mounting Height (ft.):
11 ft

Emergency Egress Coverage(ft) Mounting at height of 7.5ft:
6 ft x 3 ft mounted @ 7.5 ft

Cold Weather Rated:
No

Application:
For Standard Non Self-Diagnostic Fixtures

Construction

Shape:
Rectangle

Housing Material:
Thermoplastic

Housing Color:
Gray

No. of Heads:
2-Lamp Heads

Head Shape:
Square

Remote Head Power (W):
2W

Compliance

Listings:
UL924 Listed

Environment:
Suitable for indoor or outdoor use in dry, damp, and wet environments

IP Rating:
Indoor/Outdoor

Certification Model Number:
RHLED2-PWP-MV

T20 Compliant:
Not applicable

California Title 24 JA8 Compliant:
Not applicable

California Energy Commission (CEC) Status:
Lawful for Sales in California

FCC:
Complies with Part 15 of the FCC Rules

Copyright © 2024 RAB Lighting All Rights Reserved Note: Specifications are subject to change at any time without notice

Technical Specifications (continued)

Other

Compatible Products:
See Remote Head Compatibility List

Warranty:
RAB warrants that our LED products will be free from defects in materials and workmanship for a period of five (5) years from the date of delivery to the end user, including coverage of light output, color stability, driver performance and fixture finish. RAB's warranty is subject to all terms and conditions found at rablighting.com/warranty.

Note:
All values are typical (tolerance +/- 10%)

Buy American Act Compliance:
RAB values USA manufacturing! Upon request, RAB may be able to manufacture this product to be compliant with the Buy American Act (BAA). Please contact customer service to request a quote for the product to be made BAA compliant.

Maximum Spacing Guidelines

Copyright © 2024 RAB Lighting All Rights Reserved Note: Specifications are subject to change at any time without notice

Mounting Height	Path of Egress, 3′ Out		Path of Egress, 6′ Out		Application Notes
	Single Luminaire	Multiple Luminaires	Single Luminaire	Multiple Luminaires	
7.5′	12′	13′	6′	9′	Room Size: 50′ L x 8′ W x 9′ H *Direct calculation method used. Reflectances excluded.*
	Tilt: 20°	Tilt: 20°	Tilt: 40°	Tilt: 40°	
	Orient: 30°	Orient: 30°	Orient: 10°	Orient: 10°	

Note: Meets NFPA 101 illumination requirements of 1 FC average, 0.1 FC minimum, and 40:1 max:min.

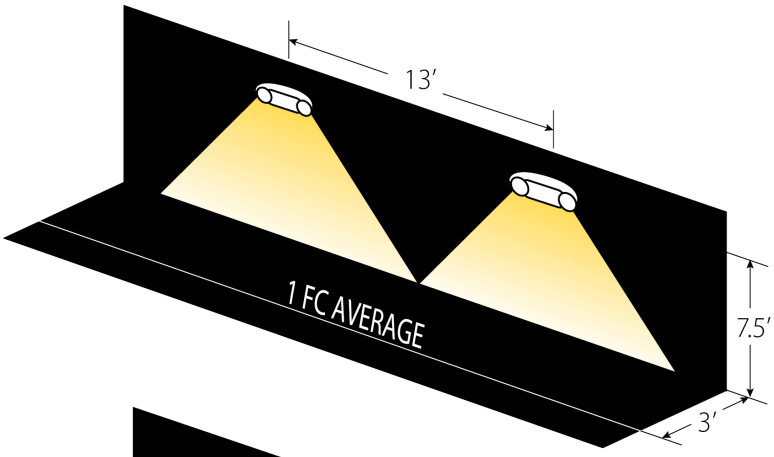

Example of multiple luminaires lighting a 3′ path of egress.

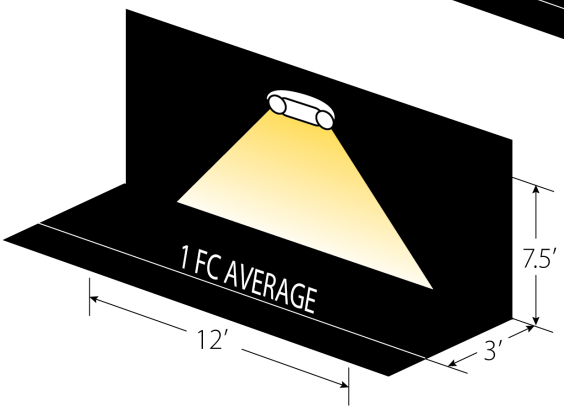

Example of a single luminaire lighting a 3′ path of egress.

Copyright © 2024 RAB Lighting All Rights Reserved Note: Specifications are subject to change at any time without notice

Dimensions

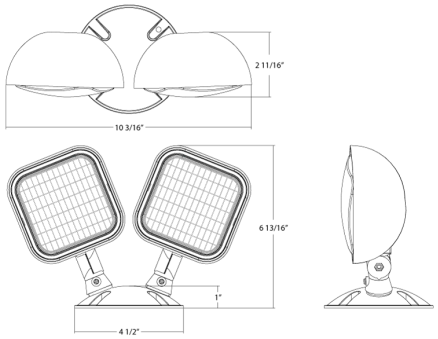

Features

- Durable thermoplastic design
- Remote head capable, see Remote Head Compatibility List

Ordering Matrix

Family	Environment	Heads	Voltage	High Lumen	Self Testing	Housing Color
EREMOTE	OUT					
	Blank = Indoor **OUT =** Outdoor	**Blank =** 2 Heads **1 =** 1 Head	**Blank =** Multi Volts	**Blank =** No High Lumen **H =** High Lumen	**Blank =** No Self Testing **S =** Self Testing	**Blank =** White **B =** Black

Copyright © 2024 RAB Lighting All Rights Reserved Note: Specifications are subject to change at any time without notice