INSTALLATION INSTRUCTIONS FOR NEW YORK APPROVED EXIT SIGN

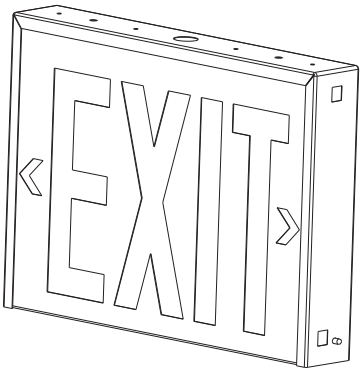

IMPORTANT SAFEGUARDS

When using electrical equipment, basic safety precautions should always be followed including the following:

IMPORTANT

When relamping, only use lamps specified in the exit. Using other lamp types may result in transformer damage or unsafe conditions. Battery (when applicable) in the unit may not be fully charged. After electricity is connected to the unit, let the battery charge up for at least 24 hrs. The normal operation of the unit should then take effect.

READ AND FOLLOW ALL SAFETY INSTRUCTIONS

- Do not use outdoors.
- Do not mount near gas or electric heaters.
- Use caution when handling batteries. Avoid possible shorting.
- Equipment should be mounted in locations and at heights where it will not be subject to tampering by unauthorized personnel.
- The use of accessory equipment not recommended by the manufacturer may cause an unsafe condition.
- Do not use this equipment for other than its intended use.
- Before wiring to power supply, turn off electricity at fuse or circuit breaker.
- Consult local building code for approved wiring and installation.
- Installation and servicing should be performed by qualified personnel.

SAVE THESE INSTRUCTIONS!

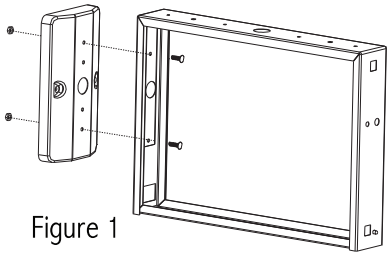

Figure 1

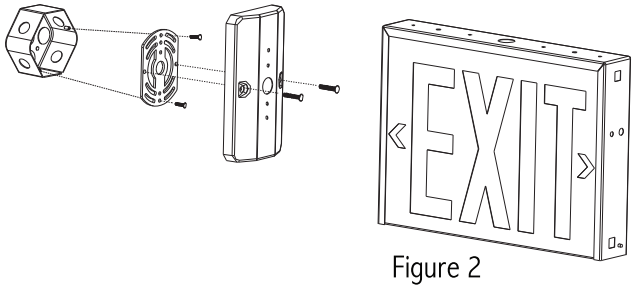

Figure 2

Wiring Diagram

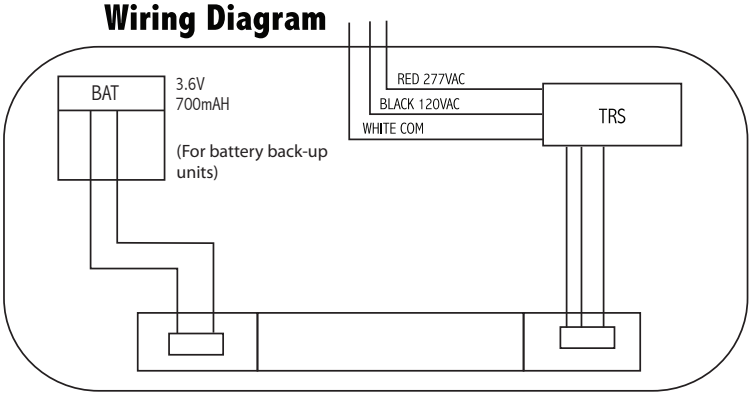

NOTE:
Properly insulate the unused lead with a wire nut or other approved means.

WARNING:
Unused wires must be capped using enclosed wire nuts.

INSTALLATION INSTRUCTIONS FOR NEW YORK APPROVED EXIT SIGN

INSTALLATION:

GENERAL

This exit is shipped with an EXTRA FACE PLATE & RED LENS to make the sign double faced. Replace the BACK PLATE with the extra face plate & lens at the start of the installation process if the application calls for a double-face sign.

CEILING or END MOUNT

1. Slide out front exit panel face plate & lens/filter by removing the screw on the bottom of the unit.
2. Remove the (3) KOs from either the side (for end mount) or top (for ceiling mount) of the fixture that lines up with the same holes on the CANOPY/J-BOX COVER. (Note: For CEILING MOUNT, you must remove the INTERNAL TRANSFORMER COVER on the inside top of the fixture. Please re-insert after installation.)
3. Using the (2) 1/2" long 8-32 screws and lock nuts, attach the canopy to the proper area of the exit sign (as shown in Figure 1).
4. Determine if ADAPTER PLATE will be needed for proper orientation of the exit sign. If it is needed, install it now with the remaining (2) 1/2" long 8-32 screws (as shown in Figure 2).
5. Mount sign to the J-Box using the (2) 1-1/2" long 8-32 screws (Figure 2), making sure to route the AC SUPPLY wires into the fixture. Use the included 20" jumper wires if needed for this step.
6. Connect AC SUPPLY WIRES to fixture input wires. BLACK is 120V, RED is 277V, and WHITE is COM.
7. Connect bi-pin BATTERY CONNECTOR to PC BOARD (when applicable).
8. Replace front panel and red lens and secure with bottom screw.

BACK MOUNTING

1. Slide out the front exit panel face plate and lens/filter by removing the screw on the bottom of the unit.
2. Determine which mounting holes will be used to mount the fixture to J-BOX and then punch out proper K/Os from the K/O pattern on the back panel of the housing.
3. Mount sign to the J-BOX using the (2) 1-1/2" long 8-32 screws, making sure to route the AC SUPPLY wires into the fixture. Use the included 20" jumper wires if needed for this step.
4. Connect AC SUPPLY wires to fixture input wires. BLACK is 120V, RED is 277V, and WHITE is COM.
5. Connect bi-pin BATTERY CONNECTOR to PC BOARD (when applicable).
6. Replace front panel and red lens and secure with bottom screw.