EXITEDGE-WPWS/E



Color: White

Weight: 3.2 lbs

Project:	**Type:**
Prepared By:	**Date:**

Technical Specifications

Performance

Product Type:
Edge-lit Exit Sign

Description:
Edge-lit exit sign with a double face, red letters, and 90 minutes of emergency battery backup.

Input Wattage:
4W @120V and 277V

Electrical

Power Factor:
≥0.9

Input Voltage:
Dual 120/277 Voltage

Operating Frequency (Hz):
60Hz

Input Current @ 120V (mA):
30mA

Input Current @ 277V (mA):
20mA

Dual Voltage Circuit Operation:
No

Operating Temperature:
32°F to 122°F (0°C to 50°C)

Emergency Illumination:
90 minutes

Battery Backup:
Yes

Battery Type:
Nickel Cadmium

Battery Voltage:
4.8V

Recharge Time Required:
24-hours

Battery Operating Temperature:
32°C to 122°C (0°F to 50°F)

Storage Temperature:
68°F to 86°F (20°C to 30°C)

Storage Shelf Life:
3 years before the initial charge. 5 years after initial charge.

Self Diagnostics:
Yes

Remote Test Switch:
No

Installation

Mounting Method:
Back/Top/End

Mounting Type:
Wall/Ceiling Mount

Cold Weather Rated:
No

Construction

Shape:
Rectangle

Housing Material:
Aluminum

Panel Material:
Acrylic

Panel Color:
White

Letter Color:
Red

Housing Color:
White

Copyright © 2024 RAB Lighting All Rights Reserved Note: Specifications are subject to change at any time without notice

Technical Specifications (continued)

Number of Faces:
Double Face

Arrow Direction:
No Arrow

Arrow Material:
Adhesive (included)

Sign Format:
Edge-lit

Remote Capacity:
No

Compliance

Listings:
UL924 Listed, NFPA 101 (current Life Safety Code), NEC and OSHA illumination standards

Environment:
Suitable for indoor use in dry and damp environments

IP Rating:
Indoor

Certification Model Number:
ELXTEU2RWWEMSDT

T20 Compliant:
Can be used to conform with the requirements of California Title 20

California Title 24 JA8 Compliant:
Not applicable

California Energy Commission (CEC) Status:
Lawful for Sales in California

FCC:
Complies with Part 15 of the FCC Rules

Other

Warranty:
RAB warrants that our LED products will be free from defects in materials and workmanship for a period of five (5) years from the date of delivery to the end user, including coverage of light output, color stability, driver performance and fixture finish. RAB's warranty is subject to all terms and conditions found at rablighting.com/warranty.
Battery is prorated.

Note:
All values are typical (tolerance +/- 10%)

Buy American Act Compliance:
RAB values USA manufacturing! Upon request, RAB may be able to manufacture this product to be compliant with the Buy American Act (BAA). Please contact customer service to request a quote for the product to be made BAA compliant.

Copyright © 2024 RAB Lighting All Rights Reserved Note: Specifications are subject to change at any time without notice

EXITEDGE-WPWS/E

Dimensions

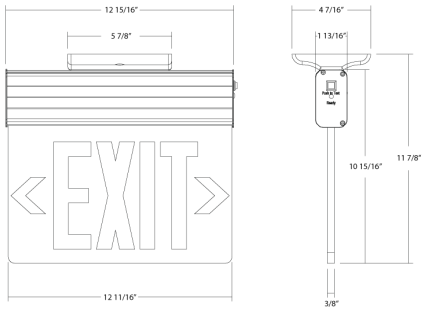

Features

- Double-face panel with color letters
- Modern edge-lit design
- Compliant with California Title 20

Ordering Matrix

Family	Mounting	Face	Exit Sign Letter Color	Panel	Housing	Arrows	Self Testing	State	Battery Backup
EXITEDGE				WP	W		S		/E
	RE = Recessed Ceiling Mount **Blank =** Wall/Ceiling Surface Mount	**Blank =** Universal Faces **1 =** 1 Face	**Blank =** Red **G =** Green	**Blank =** Clear Panel **MP =** Mirror Panel **WP =** White Panel	**Blank =** Aluminum Housing **W =** White Housing	**Blank =** No Arrow **LRA =** Left/Right Arrow **RA =** Right Arrow **LA =** Left Arrow **DA =** Double Arrow	**Blank =** No Self Testing **S =** Self Testing	**Blank =** Standard **CH =** Chicago **NY =** New York	**Blank =** No Battery Backup **/E =** Battery Backup

Copyright © 2024 RAB Lighting All Rights Reserved Note: Specifications are subject to change at any time without notice