FFLEDSW/PCU



Color: White

Weight: 5.1 lbs

Project:	**Type:**
Prepared By:	**Date:**

Driver Info

Type	Constant Current
120V	0.25A
208V	0.14A
240V	0.13A
277V	0.11A
Input Watts	18-46.4W

LED Info

Watts	26W
Color Temp	4000K/5000K
Color Accuracy	82-83 CRI
L70 Lifespan	100,000 Hours
Lumens	2615-6243 lm
Efficacy	134.5-145.8 lm/W

Technical Specifications

Field Adjustability

Field Adjustable:
Field Adjustable Light Output:
39W/26W/18W (factory default 39W)
Color temperature (selectable by 4000K and 5000K)

Compliance

UL Listed:
Suitable for wet locations. Suitable for mounting within 4ft (1.2m) of the ground.

IP Rating:
Ingress protection rating of IP66 for dust and water

IESNA LM-79 & LM-80 Testing:
RAB LED luminaires and LED components have been tested by an independent laboratory in accordance with IESNA LM-79 and LM-80.

Trade Agreements Act Compliant:
This product is a product of Cambodia and a "designated country" end product that complies with the Trade Agreements Act

DLC Listed:
This product is listed by Design Lights Consortium (DLC) as an ultra-efficient premium product that qualifies for the highest tier of rebates from DLC Member Utilities. Designed to meet DLC 5.1 requirements.
DLC Product Code: P201EN30

LED Characteristics

LEDs:
Long-life, high-efficacy, discrete, surface-mount LEDs

Color Consistency:
7-step MacAdam Ellipse binning to achieve consistent fixture-to-fixture color

Color Stability:
LED color temperature is warrantied to shift no more than 200K in color temperature over a 5-year period

Color Uniformity:
RAB's range of Correlated Color Temperature follows the guidelines of the American National Standard for (SSL) Products, ANSI C78.377-2017.

Electrical

Driver:
18W: Constant Current, Class 2, 120-277V, 50/60 Hz, 120V: 0.15A, 208V: 0.09A, 240V: 0.08A, 277V: 0.07A

26W: Constant Current, Class 2, 120-277V, 50/60 Hz, 120V: 0.25A, 208V: 0.14A, 240V: 0.13A, 277V: 0.11A

39W: Constant Current, Class 2, 120-277V, 50/60 Hz, 120V: 0.38A, 208V: 0.22A, 240V: 0.19A, 277V: 0.17A

Dimming Driver:
Driver includes dimming control wiring for 0-10V dimming systems. Requires separate 0-10V DC dimming circuit. Dims down to 10%.

THD:
1.93% at 120V, 10.57% at 277V

Power Factor:
99.92% at 120V, 90.54% at 277V

Photocell:
120-277V Button photocell included. Photocell is compatible with 120V-277V.

Surge Protection:
4kV

Performance

Lifespan:
100,000-Hour LED lifespan based on IES LM-80 results and TM-21 calculations

Wattage Equivalency:
39W: 200W Metal Halide
26W: 150W Metal Halide
18W: 100W Metal Halide

Optical

NEMA Type:
NEMA Beam Spread of 7H x 6V

Copyright © 2024 RAB Lighting All Rights Reserved Note: Specifications are subject to change at any time without notice

Technical Specifications (continued)

Construction

Cold Weather Starting:
The minimum starting temperature is -40°C (-40°F)

Ambient Temperature :
Max Power Temp Rating: 40°C (104°F)
Middle Power Temp Rating: 40°C (104°F)
Low Power Temp Rating: 40°C (104°F)

Housing:
Die-cast aluminum

Mounting:
Robust knuckle mount with 180° adjustable swivel arm. Tilt angle in 10° increments.

Effective Projected Area:
EPA = 0.32

Lens:
Ultra clear, tempered glass

Reflector:
Vacuum metalized polycarbonate

Gaskets:
High-temperature silicone gaskets

Finish:
Formulated for high durability and long-lasting color

Green Technology:
Mercury and UV free. RoHS-compliant components.

Other

Warranty:
RAB warrants that our LED products will be free from defects in materials and workmanship for a period of ten (10) years from the date of delivery to the end user, including coverage of light output, color stability, driver performance and fixture finish. RAB's warranty is subject to all terms and conditions found at rablighting.com/warranty.

Buy American Act Compliance:
RAB values USA manufacturing! Upon request, RAB may be able to manufacture this product to be compliant with the Buy American Act (BAA). Please contact customer service to request a quote for the product to be made BAA compliant.

Copyright © 2024 RAB Lighting All Rights Reserved Note: Specifications are subject to change at any time without notice

Dimensions

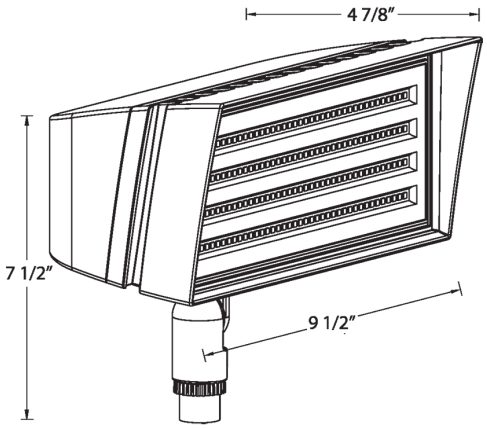

Features

- Ultra-efficient LED and optical design
- 100,000-hour life based on LM-80 results and TM-21 calculations
- DLC Premium Listed
- 10-Year, No-Compromise Warranty

Ordering Matrix

Family	Housing Size	Color Temp	Mounting	Finish	Voltage	Options
FFLED	S			W		/PCU
	XS = Field Adjustable 18W/13W/9W **S =** Field Adjustable 39W/26W/18W **M =** Field Adjustable 80W/52W **L =** Field Adjustable 230W/180W/120W	**Blank =** 4000K/5000K CCT Adjustable **Y =** 3000K Warm	**Blank =** Knuckle Mount **SF =** Slipfitter **T =** Trunnion	**Blank =** Bronze **W =** White	**Blank =** 120-277V, 0-10V Dimming **/480 =** 480V, 0-10V Dimming	**Blank =** No Option **/7PR =** 7Pin Receptacle **/PCU =** 120-277V Button Photocell

Copyright © 2024 RAB Lighting All Rights Reserved Note: Specifications are subject to change at any time without notice