FWAFER4

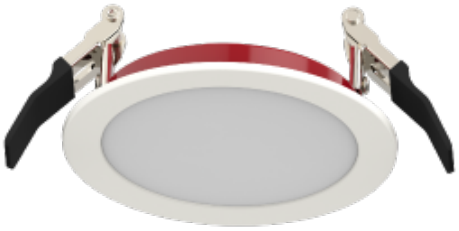

Color: White + red

Weight: 1.0 lbs

Project:	Type:
Prepared By:	Date:

Driver Info

Type	Constant Current, Class 2
120V	0.11A
208V	N/A
240V	N/A
277V	N/A
Input Watts	11W

LED Info

Watts	11W
Color Temp	2700/3000/3500/4000/5000K
Color Accuracy	>90 CRI
L70 Lifespan	50,000 Hours
Lumens	957 lm
Efficacy	87

Technical Specifications

Performance

Product Type:
Edge-Lit Wafer

Description:
Fire-resistant edge-lit wafer offered in 4" and 6" models with 5 selectable color temperatures in one wafer. The remote driver makes these ideal for new construction and retrofit applications.

Wattage Equivalency:
60W Incandescent

Input Wattage:
11W

Lumens:
2700K @ 919lm; 3000K @ 957lm; 3500K @ 991lm; 4000K 988lm; 5000K 929lm

Efficacy:
2700K @ 84lm/W; 3000K @ 87lm/W; 3500K @ 90lm/W; 4000K @ 90lm/W; 5000K @ 84lm/W

L70 Lifespan:
50,000-Hour LED lifespan based on IES LM-70 results

Electrical

Driver:
Constant Current, Class 2, 60 Hz, 120V, 120V: 0.11A

THD:
≤20%

Power Factor:
≥0.9

Dimmable:
Yes, using compatible TRIAC/ELV dimming systems. Dimmable down to 10%.

Input Voltage:
120V

Operating Frequency:
60 Hz

Input Current @ 120V (mA):
105mA

Operating Temperature:
-4°F to 104°F (-20°C to 40°C)

Flicker:
5%

LED Characteristics

Color Temperature:
Field adjustable via dip switch
2700K/3000K/3500K/4000K/5000K

Color Accuracy (CRI):
>90 CRI

R9 Value:
High color performance with R9 greater than or equal to 50

Color Consistency:
4-step MacAdam Ellipse binning to achieve consistent fixture-to-fixture color

Color Stability:
LED color temperature is warrantied to shift no more than 200K in color temperature over a 5-year period

Color Uniformity:
RAB's range of Correlated Color Temperature follows the guidelines of the American National Standard for Specifications for the Chromaticity of Solid State Lighting (SSL) Products, ANSI C78.377-2017.

Optical

Beam Angle:
90°

Copyright © 2024 RAB Lighting All Rights Reserved Note: Specifications are subject to change at any time without notice

Technical Specifications (continued)

Installation

Mounting:
Recessed Housing

Installation:
Can be installed in ceilings from 3/8" to 5/8" thick with spring-loaded retention clips. Cutout template included in box. Can be removed from below the ceiling for service or replacement.

Remote Driver/Junction Box:
Die formed metal driver / junction box with captive hinged junction box cover. Recessed CCT Selectable dipswitch. Listed for (6) #12 AWG 90°C splice conductors, 2-in, 2-out plus (2) ground. (4) 1/2" conduit pry-outs. (3) quick snap-in connectors for quick and reliable line voltage connections. Integral mounting facilitates direct mounting to building structure or mounting frame.

Construction

Size:
4"

Shape:
Round

Finish:
White+Red

Enclosure Material:
Metal

Trim Style:
Smooth

Lens:
Polycarbonate light diffuser distributes light evenly and smoothly for general lighting applications

Cut Out Template Size:
4 5/16"

IC Rated:
Suitable for direct contact with insulation

Air Tight:
Housing certified Air Tight as per ASTM E283

Compliance

Fire Resistant:
Tested to UL 263 standards for 2-hour fire resistance

Environment:
Suitable for indoor and outdoor use in dry, damp, and wet environments

DLC Listed:
Not applicable

T20 Compliant:
Not applicable

California Title 24 JA8 Compliant:
Can be used to conform with the requirements of California Title 24 Part 6

California Energy Commission (CEC) Status:
Lawful for Sales in California

RoHS:
Mercury and UV free. RoHS-compliant components.

FCC:
Complies with Part 15B of the FCC Rules

Trade Agreements Act Compliant:
This product is a product of Cambodia and a "designated country" end product that complies with the Trade Agreements Act

Energy Star Approved:
ENERGY STAR® Version 1.0 Certified

Certification Model Number:
DLG0011(RA6R109FA120WS)

Energy Star ID:
3436422

Other

Accessories:
EXTCBL-FA-6
6' Extension Cable
EXTCBL-FA-12
12' Extension Cable
EXTCBL-FA-20
20' Extension Cable

Warranty:
RAB warrants that our LED products will be free from defects in materials and workmanship for a period of five (5) years from the date of delivery to the end user, including coverage of light output, color stability, driver performance and fixture finish. RAB's warranty is subject to all terms and conditions found at rablighting.com/warranty.

Note:
All values are typical (tolerance +/- 10%)

Buy American Act Compliance:
RAB values USA manufacturing! Upon request, RAB may be able to manufacture this product to be compliant with the Buy American Act (BAA). Please contact customer service to request a quote for the product to be made BAA compliant.

Copyright © 2024 RAB Lighting All Rights Reserved Note: Specifications are subject to change at any time without notice

Dimensions

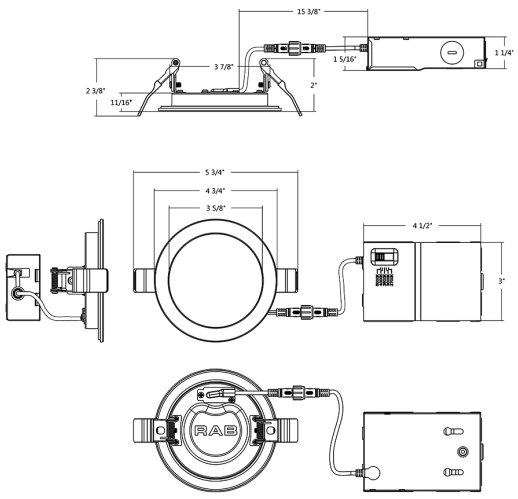

Features

- Tested to UL 263 standards for 2-hour fire resistance
- 5 color temperatures in 1 SKU (2700K, 3000K, 3500K, 4000K, 5000K)
- Super slim, edge-lit fixture
- No recessed housing or J-box required
- New construction or retrofit applications

Ordering Matrix

Family	Size	Shape	CRI/Color Temp	Voltage	Finish	Trim
FWAFER	4					
	4 = 4" **6 =** 6"	**Blank =** Round	**Blank =** 90 CRI; 2700K/3000K/3500K/4000K/5000K CCT Adjustable	**Blank =** 120V	**Blank =** White + Red	**Blank =** Smooth **B =** Baffle

Copyright © 2024 RAB Lighting All Rights Reserved Note: Specifications are subject to change at any time without notice