H17N/480



Color: White

Weight: 4.7 lbs

Project:	**Type:**
Prepared By:	**Date:**

Driver Info

Type	N/A
120V	N/A
208V	N/A
240V	N/A
277V	N/A
Input Watts	150.2W

LED Info

Watts	150W
Color Temp	4000K
Color Accuracy	82 CRI
L70 Lifespan	100,000 Hours
Lumens	22,334 lm
Efficacy	148.7 lm/W

Technical Specifications

Compliance

UL Listed:
Suitable for wet locations

IESNA LM-79 & LM-80 Testing:
RAB LED luminaires and LED components have been tested by an independent laboratory in accordance with IESNA LM-79 and LM-80.

IP Rating:
Ingress protection rating of IP65 for dust and water

DLC Listed:
This product is listed by Design Lights Consortium (DLC) as an ultra-efficient premium product that qualifies for the highest tier of rebates from DLC Member Utilities. Designed to meet DLC 5.1 requirements.
DLC Product Code: S-926SZD

Electrical

Dimming Driver:
Driver includes wiring for 0-10V dimming systems. Dim as low as 10%.

THD:
4.23% at 480V

Power Factor:
96.42% at 480V

Surge Protection:
L-N: 4kV
L/N-PE: 6kV

LED Characteristics

LEDs:
Long-life, high-efficacy, surface-mount LEDs

Color Consistency:
7-step MacAdam Ellipse binning to achieve consistent fixture-to-fixture color

Color Uniformity:
RAB's range of Correlated Color Temperature follows the guidelines of the American National Standard for Specifications for the Chromaticity of Solid State Lighting (SSL) Products, ANSI C78.377-2017.

Construction

Cold Weather Starting:
The minimum starting temperature is -40°C (-40°F)

Maximum Ambient Temperature:
Suitable for use in up to 50°C (122°F)

Housing:
Precision die-cast aluminum

Mounting:
Comes standard with a hanging hook and a 6-foot cord. Heavy-duty 3/4"-14 NPT hook and 3/4"-14 pendant mount capable (pendant by others)

Lens:
Polycarbonate lens

Reflector:
Polycarbonate and Aluminum (Reflector Accessories Sold Separately)

Finish:
Formulated for high durability and long-lasting color

Green Technology:
Mercury and UV free. RoHS-compliant components.

Other

Compatible Products:
H17 Field-Adjustable High Bay Accessories

5 Yr Limited Warranty:
The RAB 5-year, limited warranty covers light output, driver performance and paint finish. RAB's warranty is subject to all terms and conditions found at rablighting.com/warranty.

Copyright © 2024 RAB Lighting All Rights Reserved Note: Specifications are subject to change at any time without notice

Technical Specifications (continued)

Note:
All values are typical (tolerance +/- 10%)

Buy American Act Compliance:
RAB values USA manufacturing! Upon request, RAB may be able to manufacture this product to be compliant with the Buy American Act (BAA). Please contact customer service to request a quote for the product to be made BAA compliant.

Dimensions

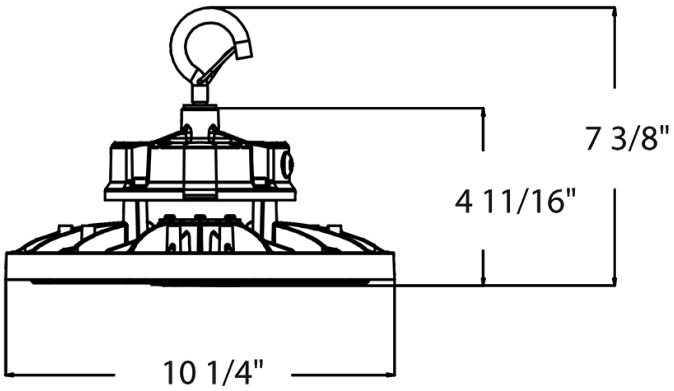

Features

- DLC Premium listed
- 100,000-hour LED Life
- 0-10V dimming standard
- 5-Year, limited warranty

Ordering Matrix

Family	Wattage	Mounting	Color Temp	Finish	Voltage
H17			N		/480
	Blank = 150W **XL =** 240W	**Blank =** Hook	**Blank =** 5000K **N =** 4000K	**Blank =** White **B =** Black	**/480 =** 480V, 0-10V Dimming

Copyright © 2024 RAB Lighting All Rights Reserved Note: Specifications are subject to change at any time without notice