INSTRUCTIONS
EXIT34-RG EMERGENCY EXIT SIGN

RAB Lighting is committed to creating high-quality, affordable, well-designed and energy-efficient LED lighting and controls that make it easy for electricians to install and end users to save energy. We'd love to hear your comments. Please call the Marketing Department at 888-RAB-1000 or email: marketing@rablighting.com

EXIT34-RG
EXIT34-RG/E

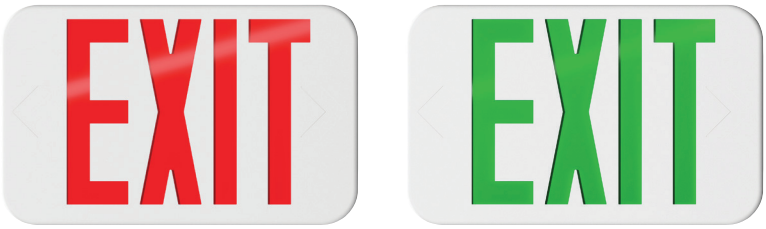

Interchangeable red or green lettering

IMPORTANT

READ CAREFULLY BEFORE INSTALLING FIXTURE. RETAIN THESE INSTRUCTIONS FOR FUTURE REFERENCE.

RAB fixtures must be wired in accordance with the National Electrical Code and all applicable local codes. Proper grounding is required for safety. THIS PRODUCT MUST BE INSTALLED IN ACCORDANCE WITH THE APPLICABLE INSTALLATION CODE BY A PERSON FAMILIAR WITH THE CONSTRUCTION AND OPERATION OF THE PRODUCT AND THE HAZARDS INVOLVED.

- When re-lamping, only use lamps specified in the exit sign. Using other lamp types may result in damage to the unit or unsafe conditions.
- Battery in this unit may not be fully charged. After electricity is hooked up to unit, let the battery charge for at least 24 hours. Normal operation of this unit should then take effect.

IMPORTANT SAFEGUARDS:

When using electrical equipment, basic safety precautions should always be followed including the following:
READ AND FOLLOW ALL SAFETY INSTRUCTIONS

- Do not use outdoors.
- Do not mount near gas or electric heaters.
- Equipment should be mounted in locations and at heights where it will not be subjected to tampering by unauthorized personnel.
- The use of accessory equipment not recommended by the manufacturer may cause an unsafe condition.
- Do not use this equipment for other than its intended use.
- Before wiring to power supply, turn off electricity at fuse or circuit breaker.
- Consult local building code for approved wiring and installation.
- Installation and servicing should be performed by qualified personnel.

Ceiling and End Mount Installation

1. Remove EXIT stencil from housing, set aside.
2. Place screws (provided) in holes on the canopy.
3. Remove the desired mounting hole plug located on the frame of the sign. For ceiling mount, hole plug will be located on the top of the housing. For wall mount, hole plug will be located on the side of the housing.
4. Place canopy tab through the mounting hole of the housing until the flat portion of the canopy is touching the housing frame. Lock the canopy into place by sliding the canopy, without turning, toward smaller end of the mounting hole until the tab is fully engaged and locked into place. Once canopy is in the locked position there will not be any side-to-side movement of the canopy.
5. Route EXIT input wires through canopy and through metal mounting plate.
6. Make wiring connection. For 120V, use black and white wires. And for 277V, use red and white wires. WARNING: Properly insulate the unused lead with a wire nut *(provided)* or other approved means.
7. Push wire connections into the J-Box. Secure mounting plate to junction box (hardware not included).
8. Secure the canopy to the steel mounting plate with screws installed in step 2.
9. Remove proper chevron(s) as required. When removing chevrons it may be helpful to remove the color diffuser panel to allow easier access to the chevrons. If removing color diffuser panel it is important to remember to reinstall the diffuser panel, securing with diffuser retention caps once chevron(s) have been removed.
10. Connect battery only after continuous AC power can be provided to the unit.
11. Secure face plate(s) to the housing.
12. Apply continuous AC power and press "TEST" button to check operation. See **OPERATION (Battery Backup)** for testing procedures.

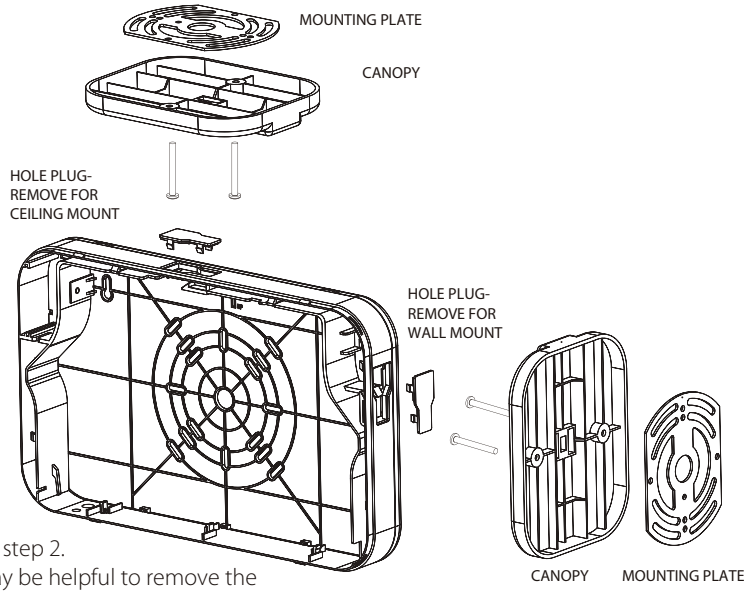

INSTRUCTIONS
EXIT34-RG EMERGENCY EXIT SIGN

RAB Lighting is committed to creating high-quality, affordable, well-designed and energy-efficient LED lighting and controls that make it easy for electricians to install and end users to save energy. We'd love to hear your comments. Please call the Marketing Department at 888-RAB-1000 or email: marketing@rablighting.com

WIRING DIAGRAMS

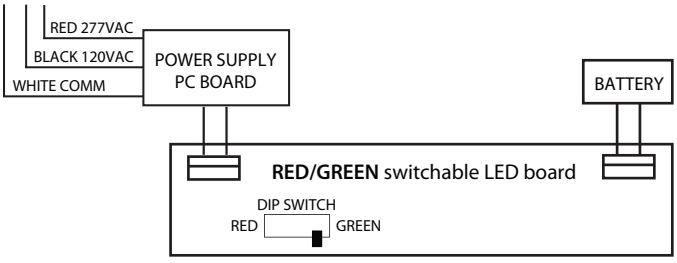

BATTERY BACKUP

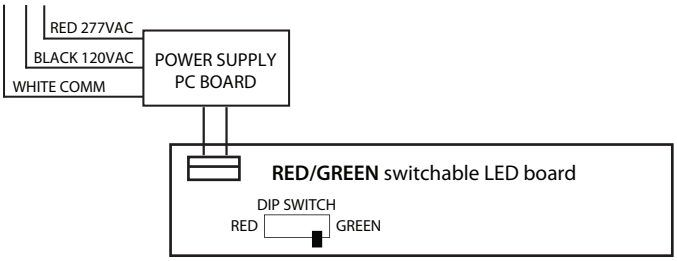

AC ONLY

NOTE: Properly insulate the unused lead with a wire nut or other approved means.
WARNING: Unused wires must be capped using enclosed wire nuts.

Wall Mount Installation

1. Remove EXIT stencil from housing, set aside.
2. Drill or knock out appropriate knockouts on backplate to fit junction box mounting points.
3. Drill or knock out center hole in backplate for EXIT supply wire leads.
4. Route EXIT input wires through center hole of the backplate and make wiring connection. For 120V, use black and white wires. And for 277V, use red and white wires.
5. Secure backplate to junction box *(hardware not included)*.
6. Connect battery only after continuous AC power can be provided to the unit.
7. Remove proper chevron(s) as required. When removing chevrons it may be helpful to remove the color diffuser panel to allow easier access to the chevrons. If removing color diffuser panel it is important to remember to reinstall the diffuser panel, securing with diffuser retention caps once chevron(s) have been removed.
8. Apply continuous AC power and press "TEST" button to check operation. See **OPERATION (Battery Backup)** for testing procedures.

RED-to-Green Conversion

1. Remove the faceplate(s) from the unit's housing.
2. Gently pop out the red diffuser lens from the faceplate(s). Replace the green diffuser lens onto the faceplate(s).
3. Toggle the dip switch from R to G on the RED/GREEN switchable LED board.
4. Replace the faceplate(s) no the housing to finish installation.

Single-to-Double Face Conversion

1. Remove the faceplate from the unit's housing.
2. Remove the backplate by pushing out the two locking clips on the inside of the unit's housing.
3. Attach the two EXIT faceplates to the housing to complete the conversion.

OPERATION (Battery Backup)

1. Apply AC power to the unit. The LED Indicator should turn RED.
2. After the battery has been left to charge for 24 hours, test the unit by pushing the switch. The LED indicator turns OFF and the LED board stays ON.
3. When the switch is released, the LED board stays ON and the LED indicator turns back to RED.

MAINTENANCE

Caution: Always turn off AC power to the equipment before servicing. Servicing should be performed only by a qualified service technician. Use only MANUFACTURER supplied replacement parts.

BATTERY: The battery supplied with the Battery Backup model requires no maintenance. However, it should be tested periodically and replaced when it no longer operates the connected fixtures for the duration of a 30-second or 90-minute test. The battery supplied in this equipment has a life expectancy of 5 years when used in a normal ambient temperature of 72°F.

TESTING

National Electric Code (NEC) and NFPA life safety code regulations require that routine tests need to be performed as listed below. Once every month, the unit needs to be tested for duration of 30 seconds. Push in hold the test switch to perform this test. Once every 12 months, a full 90 minute *(per UL requirements)* test needs to be performed on the unit. Disconnect power to the unit and leave it in the emergency mode. The LEDs should stay ON for at least 90 minutes.

© 2024 RAB LIGHTING Inc.
Cranbury, New Jersey 08512 USA

Easy Answers

rablighting.com	Tech Help Line	e-mail	Free Lighting Layouts
Visit our website for product info	Call our experts: 888 722-1000	Answered promptly - sales@rablighting.com	Answered online or by request

RAB WARRANTY: *RAB's warranty is subject to all terms and conditions found at rablighting.com/warranty.*