INSTRUCTIONS
CYLINDER WALL MOUNT INSTALLATION

RAB Lighting is committed to creating high-quality, affordable, well-designed and energy-efficient LED lighting and controls that make it easy for electricians to install and end users to save energy. We'd love to hear your comments. Please call the Marketing Department at 888-RAB-1000 or email: marketing@rablighting.com

IMPORTANT

READ CAREFULLY BEFORE INSTALLING FIXTURE. RETAIN THESE INSTRUCTIONS FOR FUTURE REFERENCE.

RAB fixtures must be wired in accordance with the National Electrical Code and all applicable local codes. Proper grounding is required for safety. THIS PRODUCT MUST BE INSTALLED IN ACCORDANCE WITH THE APPLICABLE INSTALLATION CODE BY A PERSON FAMILIAR WITH THE CONSTRUCTION AND OPERATION OF THE PRODUCT AND THE HAZARDS INVOLVED.

WARNING:

- Make certain power is OFF before installing or maintaining fixture. No user serviceable parts inside.
- Fixture is suitable for wet location
- Fixture must be mounted a minimum of 4 feet above ground level.

WALL MOUNT

(*Important: For wet locations only. For smooth mounting surfaces use gasket. For rough mounting surfaces remove gasket and apply silicone sealant around mounting arm base to insure water tight fit.*)

1. Remove **Screws** (2) from the **Fixture Mounting Arm** as shown in **Fig. 1**.
2. Mount **Junction Box Adaptor Plate** to junction box (*supplied by other*) with **Angled Sides** aligned with **Mounting Arm** screw holes. If mounting surface is uneven apply silicone sealant around the back edge of the junction box adapter plate to prevent water entry.
3. Suspend the **Fixture** with pre-installed **Tether Cable**, using **Tether Slot** in **Junction Box Adaptor Plate**. Connect supply wires to **Fixture** wires. Use appropriate UL approved wire connectors as required by code to complete wiring.
4. Mount the **Fixture** to the **Junction Box Adaptor Plate.** Replace **Screws** (2) to secure **Fixture** to **Junction Box Adaptor Plate.**

Fig: 1

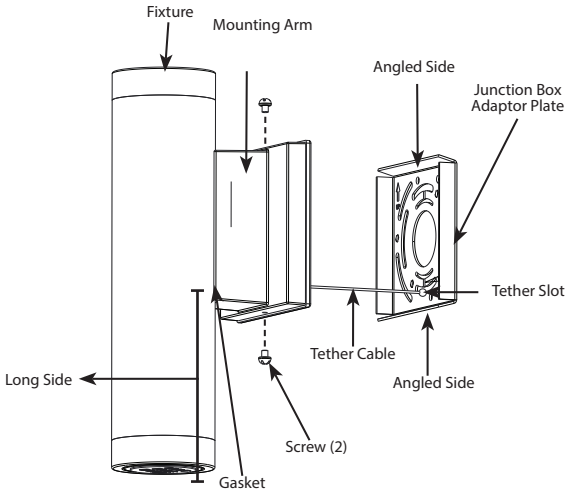

0-10V DIMMABLE WIRING

Universal voltage driver permits operation at 120V thru 277V, 50 or 60 Hz. For 0-10V Dimming, follow the wiring directions as shown in **Fig. 2**.

1. Connect the black fixture lead to the LINE supply lead.
2. Connect the white fixture lead to the COMMON supply lead.
3. Connect the GROUND wire from fixture to supply ground.
4. Connect the purple fixture lead to the (V+) DIM lead.
5. Connect the gray fixture lead to the (V-) DIM lead.

Fig: 2

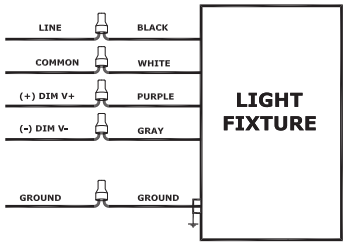

CLEANING & MAINTENANCE

CAUTION: Be sure fixture temperature is cool enough to touch. Do not clean or maintain while fixture is energized.

1. Lens can be washed only after removing from fixture and only in a solution of warm water and any mild, non-abrasive household detergent, rinsed with clean water and wiped dry. Do not use chemicals to clean Lens or fixture.
2. Do not open fixture to clean the LED. Do not touch the LED.

TROUBLESHOOTING

1. Check that the line voltage at the fixture is correct.
2. Be sure the fixture is grounded properly.

Note: These instructions do not cover all details or variations in equipment nor do they provide for every possible situation during installation, operation or maintenance.

© 2020 RAB LIGHTING Inc.
Northvale, New Jersey 07647 USA

Easy Answers

rablighting.com
Visit our website for product info

Tech Help Line
Call our experts: 888 722-1000

e-mail
Answered promptly - sales@rablighting.com

Free Lighting Layouts
Answered online or by request

RAB WARRANTY: RAB's warranty is subject to all terms and conditions found at rablighting.com/warranty.