INSTALLATION INSTRUCTIONS FOR CHICAGO APPROVED LED EXIT OR STAIRS SIGN

READ AND FOLLOW ALL SAFETY INSTRUCTIONS!

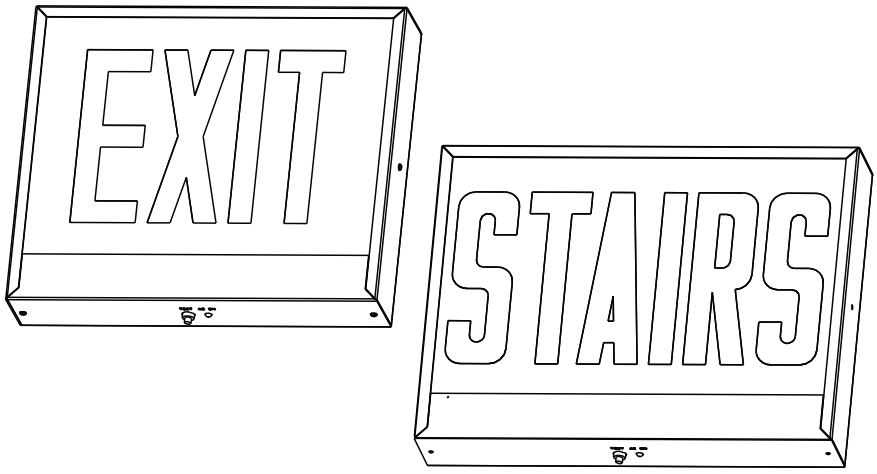

IMPORTANT SAFEGUARDS

WARNING: RISK OF ELECTRIC SHOCK - NEVER CONNECT TO, DISCONNECT FROM, OR SERVICE WHILE EQUIPMENT IS ENERGIZED.

WARNING: FAILURE TO FOLLOW THESE INSTRUCTIONS AND WARNINGS MAY RESULT IN DEATH, SERIOUS INJURY OR SIGNIFICANT PROPERTY DAMAGE - For your protection, read and follow these warnings and instructions carefully before installing or maintaining this equipment. These instructions do not attempt to cover all installation and maintenance situations.

WARNING: RISK OF FIRE - Lamps are hot. Keep combustible material away from hot parts. Observe lamp manufacture warnings, recommendations and restrictions on lamp operation and maintenance. Make sure lamps are correctly installed.

- All service shall be performed by qualified service personnel. This product must be installed and maintained in accordance with the applicable installation codes by a person familiar with the construction operation of the product and the hazards involved.
- This product must be installed in accordance with the applicable installation codes and ordinances.
- Before wiring to power supply, turn off electricity at fuse or circuit breaker.
- Disconnect A.C. power and unplug battery before servicing.
- Consult your local building code for approved wiring and installation.
- May be used outdoors under cover. (0°C-50°C)
- Do not let power supply cord touch hot surfaces.
- Do not mount near gas or electric heater.
- Equipment should be mounted in locations and at heights where it will not readily be subjected to tampering by unauthorized personnel.
- The use of accessory equipment not recommended by the manufacturer may cause an unsafe condition.
- Do not use this equipment for other than intended use.
- The AC voltage rating of this equipment is specified on the product label. Do not connect equipment to any other voltage.

SAVE THESE INSTRUCTIONS AND DELIVER TO OWNER AFTER INSTALLATION.

SAVE THESE INSTRUCTIONS

IMPORTANT:
When relamping, only use LED lightsource specified in the sign. Using other LED light source may result in transformer damage or unsafe conditions. For battery backup models, battery in the unit may not be fully charged. After electricity is connected to unit, let the battery charge up for at least 24-hrs. The normal operation of the unit should take effect.

Wiring Diagram

BATTERY BACKUP

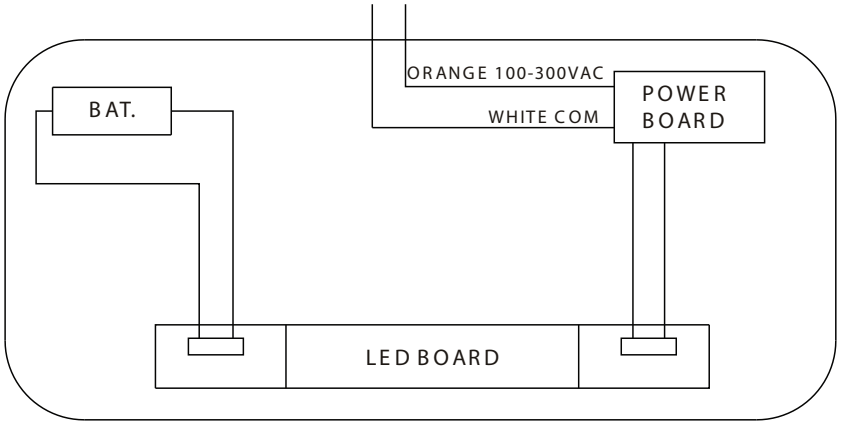

AC ONLY

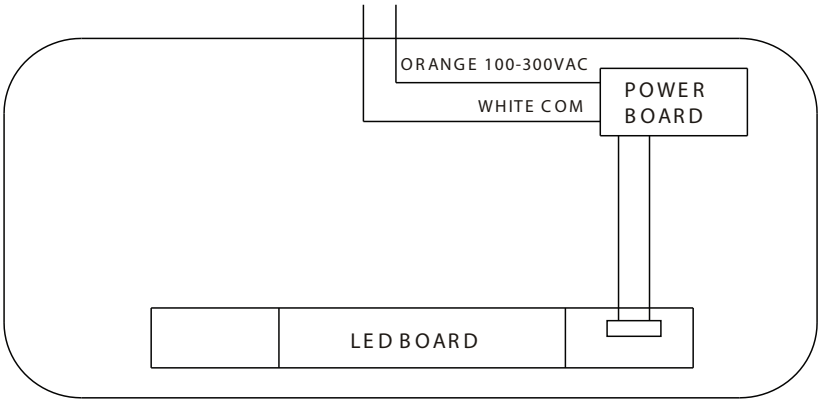

NOTE:
Properly insulate the unused lead with a wire nut or other approved means.

WARNING:
Unused wires must be capped using enclosed wire nuts.

INSTALLATION INSTRUCTIONS

GENERAL
1. This Exit may be shipped with an EXTRA FACE PLATE & RED LENS to make the sign double face. Replace the BACK PLATE with the extra face plate & lens at the start of the installation process if the application calls for a double face sign.

BACK MOUNT INSTALLATION (Figure 1)

Step 1. Extend unswitched 24 hourAC supply of rated voltage to junction box (NOT INCLUDED). Leave at least 18 inches of slack.

Step 2. Remove retainer screw from side of sign. Remove side panel and lens.

Step 3. Remove 7/8" DIA KO and required mounting pattern from back plate. Use bushing provided to protect wires from metal edge. Secure wires using cable tie. Feed wires through 7/8" DIA KO bushing.

Step 4. Connect ground in accordance with local codes. Connect wires per schematic and color code as follows: Line 100 - 3OOV- ORANGE; NEUTRAL -WHITE. Cap unused line lead.

Step 5. Mount sign securely to junction box using mounting plate and screws provided.

Step 6. For battery backup models, connect battery leads.Turn on AC supply and operate test switch. LED lamps will stay on in AC mode and remain on in Emergency mode. For AC only models, turn ON AC supply.

Step 7. Carefully slide glass into sign frame channel and replace end panel and retainer screw.

CEILING or END MOUNT (Figure 2)

Step 1. Follow steps1 to 2 of back-mount instructions.

Step 2. Knock out the appropriate mounting pattern on top or side of unit to accommodate canopy. Use plastic bushings provided to protect wires from metal edge.

Step 3. FASTEN CANOPY TO SIGN BY MEANS OF (2) SCREWS, STAR WASHERS AND NUTS.

Step 4. Secure mounting plate to junction box by choosing proper slots and using screws supplied with junction box. (NOT INCLUDED)

Step 5. Feed wires through canopy and connect to supply following step 4 of back-mount instructions.

Step 6. Mount sign with canopy to Juntion box using screws provided.

Step 7. Follow steps 6 to 7 of back-mount instructions.

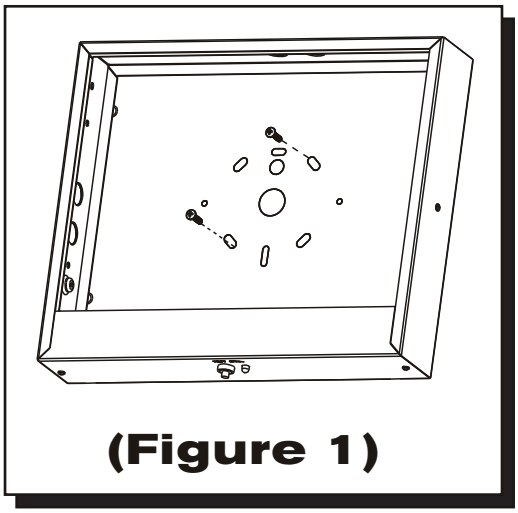

(Figure 1)

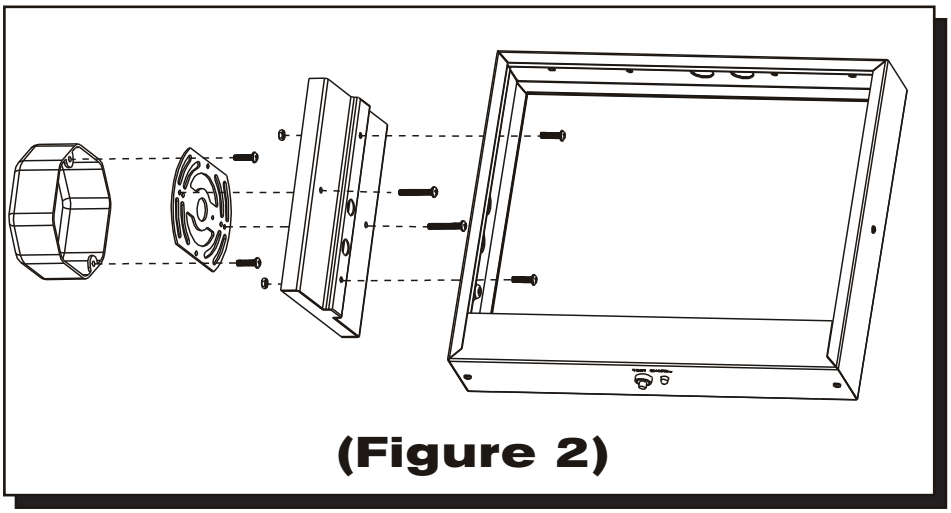

(Figure 2)