INSTRUCTIONS

Fire-Resistant Wafer Downlight FA

RAB Lighting is committed to creating high-quality, affordable, well-designed and energy-efficient LED lighting and controls that make it easy for electricians to install and end users to save energy. We'd love to hear your comments. Please call the Marketing Department at 888-RAB-1000 or email: marketing@rablighting.com

FWAFER4
FWAFER6
FWAFER4B
FWAFER6B





IMPORTANT

READ CAREFULLY BEFORE INSTALLING FIXTURE. RETAIN THESE INSTRUCTIONS FOR FUTURE REFERENCE.

RAB fixture must be wired in accordance with the National Electrical Code and all applicable local codes. Proper grounding is required for safety. THIS PRODUCT MUST BE INSTALLED IN ACCORDANCE WITH THE APPLICABLE INSTALLATION CODE BY A PERSON FAMILIAR WITH THE CONSTRUCTION AND OPERATION OF THE PRODUCT AND THE HAZARDS INVOLVED.

TO PREVENT ELECTRICAL SHOCK, POWER SHOULD BE TURNED OFF AT THE FUSE BOX BEFORE INSTALLATION.

SAFETY WARNINGS:

Read all product labels and directions.

- **WARNING – Risk of fire or electric shock. Install this kit only in the luminaires that have the construction features and dimensions shown in the photographs and/or drawings and where the input rating of the retrofit kit does not exceed the input rating of the luminaire.**
- **Installation should be performed only by a qualified electrician in accordance with the National Electrical Code and relevant local codes. Do not make or alter any open holes in an enclosure of wiring or electrical components during kit installation.**
- **WARNING – To prevent wiring damage or abrasion, do not expose wiring to edges of sheet metal or other sharp objects.**
- **INSTALLATION SHOULD ONLY BE PERFORMED AFTER POWER TO THE FIXTURE HAS BEEN DISCONNECTED.**
- **These instructions shall be included on an information sheet packaged with each unit.**
- **This device complies with Part 15 of the FCC Rules. Operation is subject to the following two conditions:**

(1) this device may not cause harmful interference, and (2) this device must accept any interference received, including interference that may cause undesired operation.

WHAT'S IN THE BOX

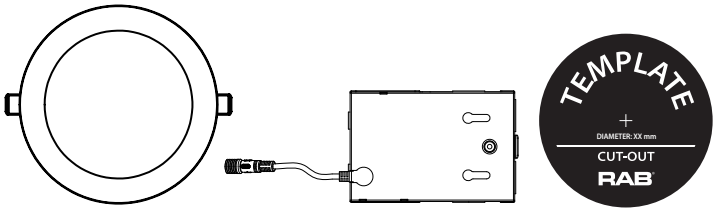

Fixture (1) Driver box (1) Template (1)

OPTIONAL ACCESSORIES (sold separately)

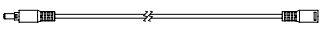

EXTCBL-FA-6
Wafer extension cable 6ft

EXTCBL-FA-12
Wafer extension cable 12ft

EXTCBL-FA-20
Wafer extension cable 20ft

TOOLS NEEDED

This fire-resistant wafer requires very few tools for installation. A screwdriver and a pair of wirecutters will help to install.

INSTRUCTIONS

Fire-Resistant Wafer Downlight FA

RAB Lighting is committed to creating high-quality, affordable, well-designed and energy-efficient LED lighting and controls that make it easy for electricians to install and end users to save energy. We'd love to hear your comments. Please call the Marketing Department at 888-RAB-1000 or email: marketing@rablighting.com

INSTALLATION INSTRUCTIONS

1. Turn power OFF from the electrical panel before installation.
2. Use template inside box to cut hole in ceiling. *(Fig.1)*

Fig: 1

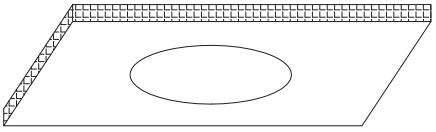

3. Open the driver box and remove the knockout(s). *(Fig.2)*

Fig: 2

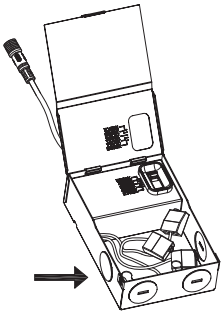

4. Insert the electrical supply cable through the knockout and secure with a terminal. Wire driver box *(Fig.3)* , white-white, black - black, green - green/ground.

Fig: 3

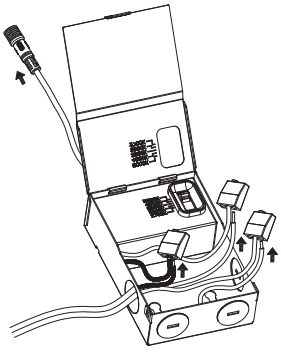

5. Place all wiring and connections back into the box, close the cover and select desired CCT. *(Fig.4)*

Fig: 4

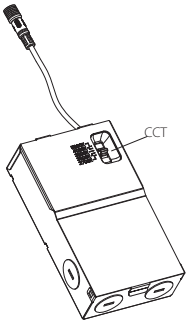

INSTALLATION INSTRUCTIONS *(cont'd)*

6. Place the driver box into the ceiling and connect the fixture to driver box. *(Fig.5)*

Fig: 5

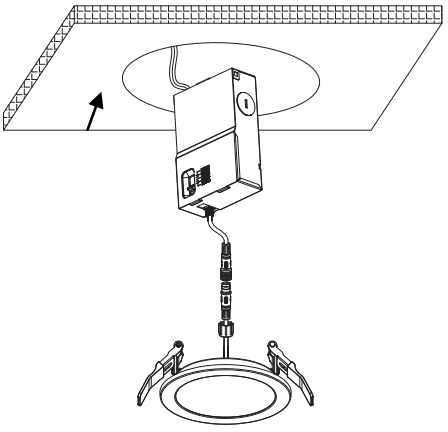

7. Lifting both retention tabs upward. Push until the trim sits flush against the ceiling. *(Fig.6)*

Fig: 6

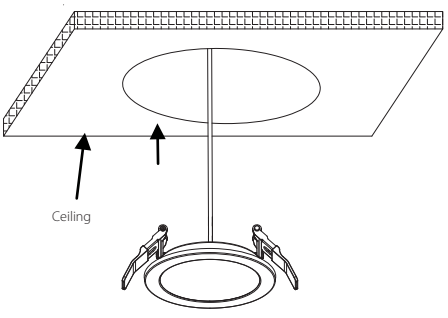

Note: *These instructions do not cover all details or variations in equipment nor do they provide for every possible situation during installation, operation or maintenance.*

© 2023 RAB LIGHTING Inc.
Cranbury, New Jersey 08512 USA
Fire-Resistant Wafer Downlight FA

Easy Answers

rablighting.com	Tech Help Line	e-mail	Free Lighting Layouts
Visit our website for product info	Call our experts: 888 722-1000	Answered promptly - sales@rablighting.com	Answered online or by request

RAB WARRANTY: *RAB's warranty is subject to all terms and conditions found at rablighting.com/warranty.*