# FXLEDXSSFW



Color: White

Weight: 16.5 lbs

| | |
|---|---|
| **Project:** | **Type:** |
| **Prepared By:** | **Date:** |

### Driver Info

| | |
|---|---|
| Type | Constant Current |
| 120V | 0.72A |
| 208V | 0.40A |
| 240V | 0.34A |
| 277V | 0.30A |
| Input Watts | 39.7-85.7W |

### LED Info

| | |
|---|---|
| Watts | 80W |
| Color Temp | 4000K/5000K |
| Color Accuracy | 82-85 CRI |
| L70 Lifespan | 100,000 Hours |
| Lumens | 5,797-11,887 lm |
| Efficacy | 138.7-147.8 lm/W |

## Technical Specifications

### Field Adjustability

**Field Adjustable:**
Field Adjustable Light Output:
80W/60W/40W (factory default 80W)
Color temperature (selectable by 4000K and 5000K)

### Compliance

**UL Listed:**
Suitable for wet locations. Suitable for mounting within 4ft (1.2m) of the ground.

**IP Rating:**
Ingress protection rating of IP66 for dust and water

**IESNA LM-79 & LM-80 Testing:**
RAB LED luminaires and LED components have been tested by an independent laboratory in accordance with IESNA LM-79 and LM-80.

**Trade Agreements Act Compliant:**
This product is a product of Cambodia and a "designated country" end product that complies with the Trade Agreements Act

### LED Characteristics

**LEDs:**
Long-life, high-efficacy, discrete, surface-mount LEDs

**Color Consistency:**
7-step MacAdam Ellipse binning to achieve consistent fixture-to-fixture color

**Color Stability:**
LED color temperature is warrantied to shift no more than 200K in color temperature over a 5-year period

**Color Uniformity:**
RAB's range of Correlated Color Temperature follows the guidelines of the American National Standard for (SSL) Products, ANSI C78.377-2017.

### Electrical

**Driver:**
40W: Constant Current, Class 2, 120-277V, 50/60 Hz, 120V: 0.34A, 208V: 0.20A, 240V: 0.17A, 277V: 0.15A

60W: Constant Current, Class 2, 120-277V, 50/60 Hz, 120V: 0.53A, 208V: 00.30A, 240V: 0.25A, 277V: 0.22A

80W: Constant Current, Class 2, 120-277V, 50/60 Hz, 120V: 0.72A, 208V: 0.40A, 240V: 0.34A, 277V: 0.30A

**Dimming Driver:**
Driver includes dimming control wiring for 0-10V dimming systems. Requires separate 0-10V DC dimming circuit. Dims down to 10%.

**THD:**
2.71% at 120V, 7.74% at 277V

**Power Factor:**
99.85% at 120V, 93.52% at 277V

**Surge Protection:**
6kV

### Performance

**Lifespan:**
100,000-Hour LED lifespan based on IES LM-80 results and TM-21 calculations

**Wattage Equivalency:**
80W: 400W Metal Halide
60W: 350W Metal Halide
40W: 174W Metal Halide

### Optical

**NEMA Type:**
NEMA Beam Spread of 6H x 6V

### Construction

**Cold Weather Starting:**
The minimum starting temperature is -40°C (-40°F)


Copyright © 2024 RAB Lighting All Rights Reserved Note: Specifications are subject to change at any time without notice

## Technical Specifications (continued)

**Ambient Temperature :**
Max Power Temp Rating: 40°C (104°F)
Middle Power Temp Rating: 40°C (104°F)
Low Power Temp Rating: 40°C (104°F)

**Housing:**
Die-cast aluminum

**Mounting:**
2 3/8" slipfitter mount with stainless steel hardware

**Tilt Increment:**
Rotates in 5 degree increments

**Lens:**
Ultra clear, tempered glass

**Reflector:**
Vacuum metalized polycarbonate

**Vibration Rating:**
3G vibration rating per ANSI C136.31

**Effective Projected Area:**
EPA = 0.5

**Gaskets:**
High-temperature silicone gaskets

**Finish:**
Formulated for high durability and long-lasting color

**Green Technology:**
Mercury and UV free. RoHS-compliant components.

### Other

**Warranty:**
RAB warrants that our LED products will be free from defects in materials and workmanship for a period of ten (10) years from the date of delivery to the end user, including coverage of light output, color stability, driver performance and fixture finish. RAB's warranty is subject to all terms and conditions found at rablighting.com/warranty.

**Buy American Act Compliance:**
RAB values USA manufacturing! Upon request, RAB may be able to manufacture this product to be compliant with the Buy American Act (BAA). Please contact customer service to request a quote for the product to be made BAA compliant.


Copyright © 2024 RAB Lighting All Rights Reserved Note: Specifications are subject to change at any time without notice

## Dimensions

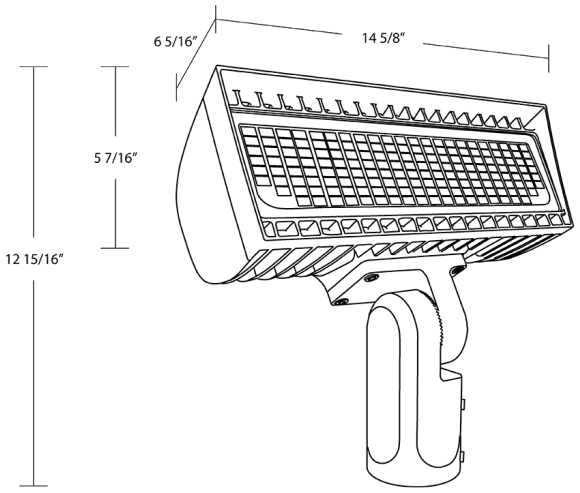


## Features

- 100,000-hour life based on LM-80 results and TM-21 calculations
- DLC Premium Listed
- IP66 Rating protects against dust & water ingress
- 10-Year, No-Compromise Warranty

## Ordering Matrix

| Family | Housing Size | Color Temp | Mounting | Finish | Voltage | Options |
|---|---|---|---|---|---|---|
| FXLED | XS | | SF | W | | |
| | **XS =** Field Adjustable 80/60/40W<br>**S =** Field Adjustable 168/132/97/69W<br>**M =** Field Adjustable 346/213W<br>**L =** Field Adjustable 534/445W | **Blank =** 4000K/5000K CCT Adjustable | **SF =** Slipfitter<br>**T =** Trunnion | **Blank =** Bronze<br>**W =** White | **Blank =** 120-277V, 0-10V Dimming<br>**/480 =** 480V, 0-10V Dimming | **Blank =** No Option<br>**/7PR =** 7-Pin receptacle |


Copyright © 2024 RAB Lighting All Rights Reserved Note: Specifications are subject to change at any time without notice