GUSJR2



The affordable LED GUSJR is designed to deliver general ambient lighting for surface-mount ceiling/wall or pendant mount applications. Prismatic lens delivers improved visual performance and a more traditional look. Replaces traditional 2' linear fluorescent wraparound fixtures.

Color: White

Weight: 5.1 lbs

Project:	**Type:**
Prepared By:	**Date:**

Driver Info

Type	Constant
120V	0.17A/0.13A/0.08A
208V	0.10A/0.07A/0.05A
240V	0.09A/0.07A/0.05A
277V	0.08A/0.06A/0.05A
Input Watts	10.6-20.2W

LED Info

Watts	20/15/10W
Color Temp	3500K/4000K/5000K
Color Accuracy	83-85 CRI
L70 Lifespan	N/A
Lumens	1,382-2,790 lm
Efficacy	126.2-143.8 lm/W

Technical Specifications

Field Adjustability

Field Adjustable:
Field Adjustable Light Output:
2 ft: 22W/17W/11W (factory default 22W)
Color temperature selectable by 3500K, 4000K and 5000K (factory default 4000K)

Compliance

UL Listed:
Suitable for damp locations

IESNA LM-79 & LM-80 Testing:
RAB LED luminaires and LED components have been tested by an independent laboratory in accordance with IESNA LM-79 and LM-80.

Trade Agreements Act Compliant:
This product is a product of Cambodia and a "designated country" end product that complies with the Trade Agreements Act

DLC Listed:
This product is on the Design Lights Consortium (DLC) Qualified Products List and is eligible for rebates from DLC Member Utilities. Designed to meet DLC 5.1 requirements.
DLC Product Code: S-IWJQ5M

Electrical

Driver:
20W: Class 1, Constant Current, 120-277V, 50/60 Hz, 120V: 0.17A, 208V: 0.10A, 240V: 0.09A, 277V: 0.08A

15W: Class 1, Constant Current, 120-277V, 50/60 Hz, 120V: 0.13A, 208V: 0.07A, 240V: 0.07A, 277V: 0.06A

10W: Class 1, Constant Current, 120-277V, 50/60 Hz, 120V: 0.08A, 208V: 0.06A, 240V: 0.05A, 277V: 0.04A

Dimming Driver:
Driver includes dimming control wiring for 0-10V dimming systems. Requires separate 0-10V DC dimming circuit. Dims down to 10%.

THD:
7% at 120V, 7% at 277V

Power Factor:
99.5% at 120V, 97.3% at 277V

Surge Protection:
L-N: 2KV
L/N-GND: 4KV

Performance

Lifespan:
50,000-Hour LED lifespan based on IES LM-80 results and TM-21 calculations

LED Characteristics

LEDs:
Long-life, high-efficiency, surface-mount LEDs

Color Uniformity:
RAB's range of Correlated Color Temperature follows the guidelines of the American National Standard for Specifications for the Chromaticity of Solid State Lighting (SSL) Products, ANSI C78.377-2017.

Construction

Cold Weather Starting:
The minimum starting temperature is -20°C (-4°F)

Maximum Ambient Temperature:
Suitable for use in up to 45°C (113°F)

Housing:
Sheet metal stamping 24 gauge, cold-rolled steel

Reflector:
Sheet metal forming 24 gauge, cold-rolled steel with white powder coat

Lens:
Diffused Polymethyl Methacrylate (PMMA)

Mounting:
Surface mount. Can be mounted with v-hooks (ordered separately).

Copyright © 2024 RAB Lighting All Rights Reserved Note: Specifications are subject to change at any time without notice

Technical Specifications (continued)

Finish:
Formulated for high durability and long-lasting color

Green Technology:
Mercury and UV free. RoHS-compliant components.

Other

5 Yr Limited Warranty:
The RAB 5-year, limited warranty covers light output, driver performance and paint finish. RAB's warranty is subject to all terms and conditions found at rablighting.com/warranty.

Buy American Act Compliance:
RAB values USA manufacturing! Upon request, RAB may be able to manufacture this product to be compliant with the Buy American Act (BAA). Please contact customer service to request a quote for the product to be made BAA compliant.

Dimensions

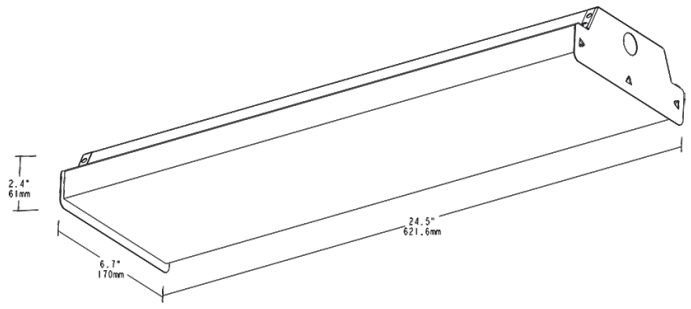

Features

- Affordable, easy to use LED wrap fixture
- 0-10V dimming, standard
- 50,000-Hour LED lifespan

Copyright © 2024 RAB Lighting All Rights Reserved Note: Specifications are subject to change at any time without notice

Ordering Matrix

Family	Size (Wattages)	Color Temp	Voltage	Finish	Options
GUSJR	2				
	4 = 4' (40/30/20W) **2 =** 2' (20/15/10W)	**Blank =** 3500K/4000K/5000K CCT Adjustable	**Blank =** 120-277V, 0-10V Dimming	**Blank =** White	**/LCBS/MVS/E =** Lightcloud Blue Enabled w/MVS Sensor and Battery Backup **/LCBS/E =** Lightcloud Blue Enabled w/PIR Sensor and Battery Backup **/PIR/E =** Passive Infrared Occupancy Sensor w/Battery Back Up **/MVS/E =** Microwave Occupancy Sensor w/Battery Backup **/LCBS/MVS =** Lightcloud Blue Enabled w/MVS Sensor **/LCBS =** Lightcloud Blue Enabled w/PIR Sensor **/LCB =** Lightcloud Blue Enabled **/LC =** Lightcloud Controller **/PIR =** Passive Infrared Occupancy Sensor **/MVS =** Microwave Occupancy Sensor **/E =** Battery Backup **Blank =** No Option

Copyright © 2024 RAB Lighting All Rights Reserved Note: Specifications are subject to change at any time without notice