INSTRUCTIONS

H17 & H17XL DROP LENS INSTALLATION

RAB Lighting is committed to creating high-quality, affordable, well-designed and energy-efficient LED lighting and controls that make it easy for electricians to install and end users to save energy. We'd love to hear your comments. Please call the Marketing Department at 888-RAB-1000 or email: marketing@rablighting.com



IMPORTANT

READ CAREFULLY BEFORE INSTALLING FIXTURE. RETAIN THESE INSTRUCTIONS FOR FUTURE REFERENCE.

RAB fixtures must be wired in accordance with the National Electrical Code and all applicable local codes. Proper grounding is required for safety. THIS PRODUCT MUST BE INSTALLED IN ACCORDANCE WITH THE APPLICABLE INSTALLATION CODE BY A PERSON FAMILIAR WITH THE CONSTRUCTION AND OPERATION OF THE PRODUCT AND THE HAZARDS INVOLVED.

WARNING: Make certain power is OFF before installing or maintaining fixture. No user serviceable parts inside.

DROP LENS MOUNTING

1. Place the **Drop Lens** on the **Reflector** as shown in Fig. 1, and 2.
2. Clamp the **Steel Ring** onto the **Drop Lens** and secure with **Spring** as shown in Fig. 3 and 4.

CLEANING & MAINTENANCE

CAUTION: Be sure fixture temperature is cool enough to touch. Do not clean or maintain while fixture is energized.

1. Clean fixture and components with non-abrasive cleaning solution.
2. Do not open fixture to clean the LED. Do not touch the LED.

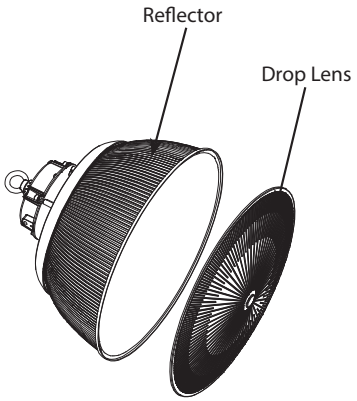

Fig: 1

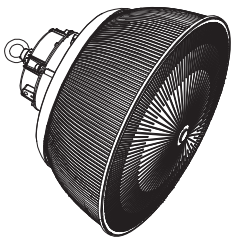

Fig: 2

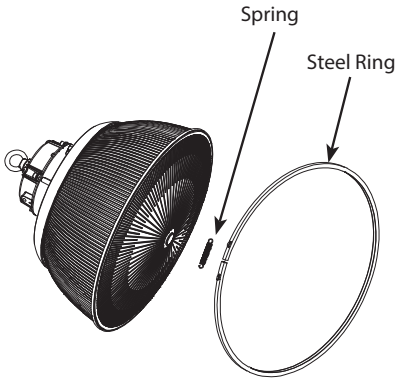

Fig: 3

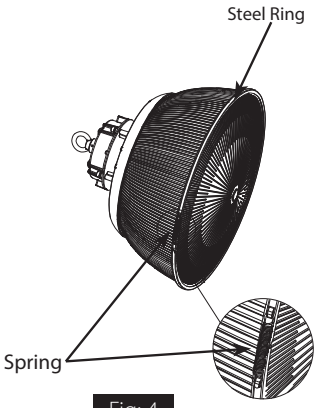

Fig: 4

Note: These instructions do not cover all details or variations in equipment nor do they provide for every possible situation during installation operation or maintenance.

© 2022 RAB LIGHTING Inc.

Easy Answers

rablighting.com
Visit our website for product info

Tech Help Line
Call our experts: 888 722-1000

e-mail
Answered promptly - sales@rablighting.com

Free Lighting Layouts
Answered online or by request

H17 & H17XL Drop Lens - IN - 0422
P-100121