HAT4SA



Color: Bronze

Weight: 0.1 lbs

Project:	Type:
Prepared By:	Date:

Technical Specifications

Performance

Description:
4-inch square bronze smooth trim for HALED, see Trim Compatibility List

Product Type:
Recessed Downlights

Lumens:
5000K: 1,000lm
4000K: 1,000lm
3500K: 1,000lm
3000K: 980lm
2700K: 950lm

Efficacy:
5000K: 83lm/W
4000K: 83lm/W
3500K: 83lm/W
3000K: 82lm/W
2700K: 79lm/W

Construction

Trim Component:
This component must be ordered with 4" HALED downlight module in order to make a complete fixture. See here for " 4" HALED module.

Material:
Metal

Trim Style:
Smooth Trim

Shape:
Square

Other

Note:
All values are typical (tolerance +/- 10%)

Buy American Act Compliance:
RAB values USA manufacturing! Upon request, RAB may be able to manufacture this product to be compliant with the Buy American Act (BAA). Please contact customer service to request a quote for the product to be made BAA compliant.

Copyright © 2024 RAB Lighting All Rights Reserved Note: Specifications are subject to change at any time without notice

Dimensions

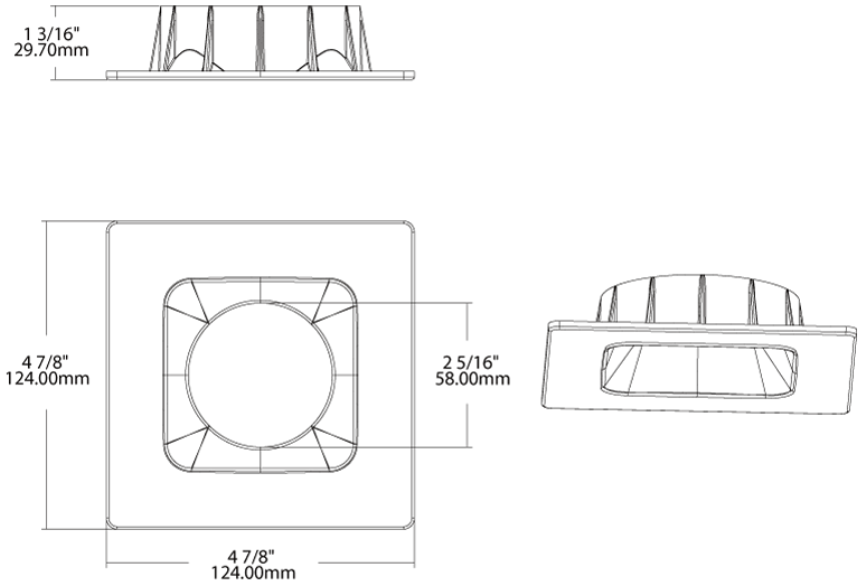

Copyright © 2024 RAB Lighting All Rights Reserved Note: Specifications are subject to change at any time without notice