H17-RAL



Weight: 0.9 lbs

Project:	Type:
Prepared By:	Date:

Technical Specifications

Performance

Description:
H17 aluminum reflector

Other

Compatibility:
H17

Buy American Act Compliance:
RAB values USA manufacturing! Upon request, RAB may be able to manufacture this product to be compliant with the Buy American Act (BAA). Please contact customer service to request a quote for the product to be made BAA compliant.

Construction

Finish:
Formulated for high durability and long-lasting color

Copyright © 2024 RAB Lighting All Rights Reserved Note: Specifications are subject to change at any time without notice

Dimensions

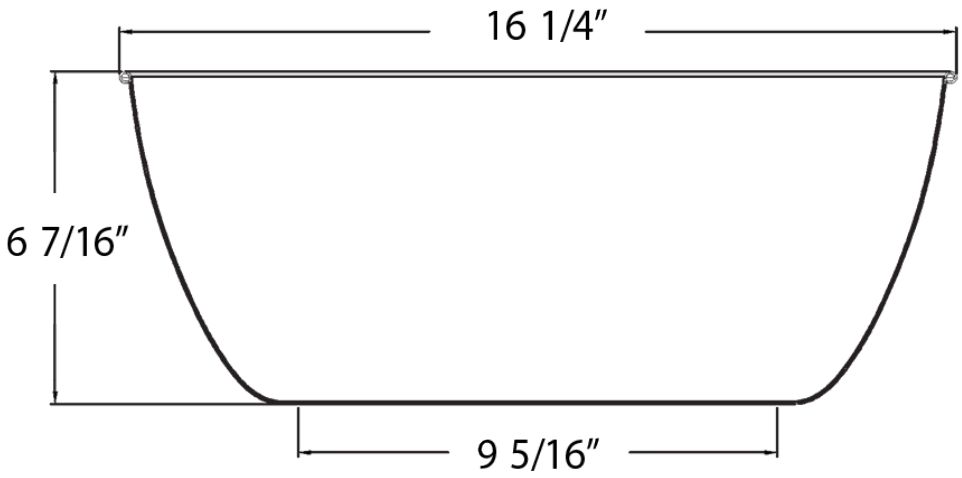

Copyright © 2024 RAB Lighting All Rights Reserved Note: Specifications are subject to change at any time without notice