HALV18L935-CS-A



Antique Bronze Frame with Crush Sedona Lens

Note: Fixture will come fully assembled with the frame and lens shown above.

Project:	**Type:**
Prepared By:	**Date:**

Driver Info

Type	Constant Current
120V	0.22A
208V	0.13A
240V	0.11A
277V	0.1A
Input Watts	25.9W

LED Info

Watts	25W
Color Temp	3500K (Warm Neutral)
Color Accuracy	93 CRI
R9	76
L70 Lifespan	50,000 Hours
Lumens	469 lm
Efficacy	18.1 lm/W

Technical Specifications

Compliance

UL Listed:
Suitable for damp locations. Recommended for indoor use only.

ADA Compliant:
Meets ADA Requirements for wall-mounted luminaires.

IESNA LM-79 & LM-80 Testing:
RAB LED luminaires and LED components have been tested by an independent laboratory in accordance with IESNA LM-79 and LM-80.

Performance

Lifespan:
50,000-Hour LED lifespan based on IES LM-80 results and TM-21 calculations

Wattage Equivalency:
Equivalent to 100W Incandescent

LED Characteristics

LEDs:
Long-life, high-efficacy, surface-mount LEDs; binned and mixed for uniform light output and color

Color Stability:
LED color temperature is warrantied to shift no more than 200K in color temperature over a 5-year period

Color Uniformity:
RAB's range of Correlated Color Temperature follows the guidelines of the American National Standard for Specifications for the Chromaticity of Solid State Lighting (SSL) Products, ANSI C78.377-2017.

Electrical

Driver:
Constant Current, Class 2, 120-277VAC, 50/60Hz, 350mA or 640mA

Dimming Driver:
0 - 10V (at 120-277V), TRIAC and ELV (at 120V only)

THD:
12.6% at 120V, 16.1% at 277V

Power Factor:
98.4% at 120V, 94.3% at 277V

Battery Backup Light Loss Factor:
0.18

Construction

Housing:
Die-cast and extruded aluminum

Mounting:
Wall mount with junction box included

Lens:
Acrylic lens with crush sedona print. See installation sheet for cleaning instructions.

Operating Temperature:
-20°C (-4°F) to 40°C (104°F)

Green Technology:
Mercury and UV free. RoHS-compliant components.

Finish:
Luxuriously Electroplated Antique Bronze

Other

Warranty:
RAB warrants that our LED products will be free from defects in materials and workmanship for a period of five (5) years from the date of delivery to the end user, including coverage of light output, color stability, driver performance and fixture finish. RAB's warranty is subject to all terms and conditions found at rablighting.com/warranty.

Buy American Act Compliance:
RAB values USA manufacturing! Upon request, RAB may be able to manufacture this product to be compliant with the Buy American Act (BAA). Please contact customer service to request a quote for the product to be made BAA compliant.

Copyright © 2024 RAB Lighting All Rights Reserved Note: Specifications are subject to change at any time without notice

Dimensions

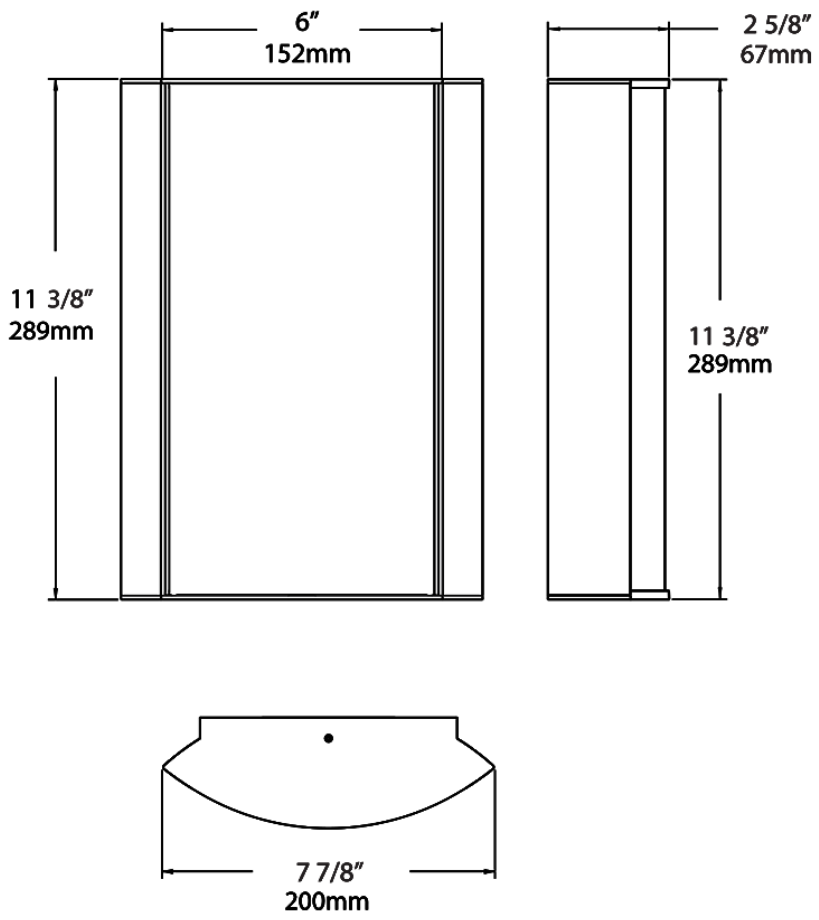

Copyright © 2024 RAB Lighting All Rights Reserved Note: Specifications are subject to change at any time without notice

Ordering Matrix

Family	Lumen Package	CRI/Color Temp		Lens		Finish	Options
HALV	18L	935	–	CS	–	A	

18L = 1800lm / 25W [1]
10L = 1000lm / 14W [1]

940 = 90CRI, 4000K
935 = 90CRI, 3500K
930 = 90CRI, 3000K
927 = 90CRI, 2700K

MG = Metallic Spun Gold
MA = Mirage Bronze
MP = Mirage Platinum
CS = Crush Sedona
CW = Crush Polar White
MC = Metallic Spun Copper
MS = Metallic Spun Silver
LH = Linen Harbor
LW = Linen Hampton White
TL = Toffee Leaves
GL = Green Leaves
NL = Natural Leaves
FG3 = Frosted with Grill Style #3
FG2 = Frosted with Grill Style #2
FG1 = Frosted with Grill Style #1
F = Frosted (Standard)
LS = Linen Stone

S = Silver
CU = Copper
SA = Satin Nickel
A = Antique Bronze
K = Black
W = White

Blank = No Option
/E2 = Battery Backup
/MVS = Microwave Occupancy Sensor [2]
/BL = Bi-Level Control
/LC = Lightcloud Controller
/MVS/E2 = Microwave Occupancy Sensor w/Battery Backup [2]
/BL/E2 = Bi-Level Control w/Battery Backup
/LC/E2 = Lightcloud Controller w/Battery Backup

[1] *Lumen values are approximations for models with a standard, frosted lens. Visit rablighting.com for exact output based on your specific configuration.*
[2] *Available only with grill pattern*

Copyright © 2024 RAB Lighting All Rights Reserved Note: Specifications are subject to change at any time without notice