INSTRUCTIONS

HALV Indoor Architectural-Grade LED Wall Sconce

RAB Lighting is committed to creating high-quality, affordable, well-designed and energy-efficient LED lighting and controls that make it easy for electricians to install and end users to save energy. We'd love to hear your comments. Please call the Marketing Department at 888-RAB-1000 or email: marketing@rablighting.com

HALV



IMPORTANT

READ CAREFULLY BEFORE INSTALLING FIXTURE. RETAIN THESE INSTRUCTIONS FOR FUTURE REFERENCE.

RAB fixtures must be wired in accordance with the National Electrical Code and all applicable local codes. Proper grounding is required for safety. THIS PRODUCT MUST BE INSTALLED IN ACCORDANCE WITH THE APPLICABLE INSTALLATION CODE BY A PERSON FAMILIAR WITH THE CONSTRUCTION AND OPERATION OF THE PRODUCT AND THE HAZARDS INVOLVED.

WARNINGS:

- **Make certain power is OFF before installing or maintaining fixture. No user serviceable parts inside.**
- **To prevent wiring damage or abrasion, do not expose wiring to edges of sharp objects.**

CAUTION:

- **This fixture supports the following protocols – TRIAC and ELV at 120V ONLY. For 0-10V dimming, connect purple wire to the V+ DIM lead and the grey wire to the V-DIM lead. This fixture is damp listed and suitable for indoor applications on walls. Driver is 120V – 277V and 50Hz or 60 Hz.**

JUNCTION BOX WALL MOUNTING *(standard models)*

Mounting the fixture on a standard 4 x 4 junction box.
This fixture is damp listed and suitable for indoor applications on walls.

1. Loosen the *(4)* **Driver/LED Mounting** Phillips head screws and separate the **Driver/LED Assembly** from the wall plate. No need to remove the screws completely—use the keyhole. **DO NOT TOUCH THE LEDs**. See **Figure 1**.
2. Set **Driver/LED** assembly aside.
3. Pull wires from junction box through the **Wall Plate** opening and mount **Wall Plate** to junction box using screws provided with the junction box. Making sure the **'S' Hook** notch is at the top.
4. Hang the **Driver/LED Assembly** on the **'S' Hook** as shown in **Figure 1a**.
5. Make wiring connections. Push wire nuts through hole into junction box.
6. Replace **Driver/LED Assembly** making sure not to pinch any wires.
7. Tighten **Driver/LED Mounting Screws.**

FIG.1

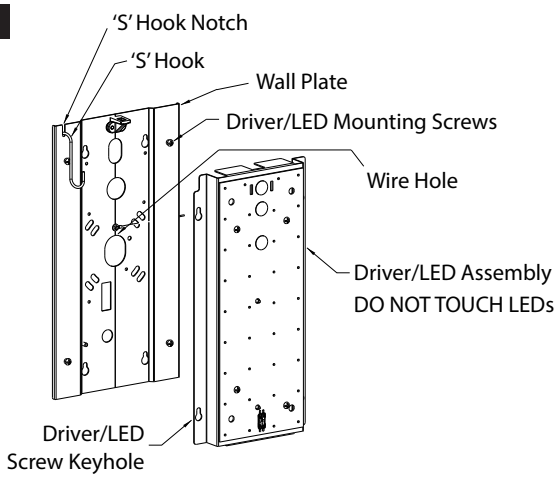

FIG.1a

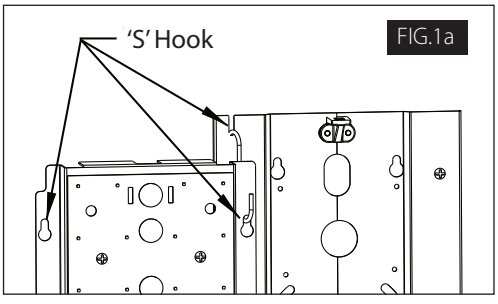

INSTRUCTIONS

HALV Indoor Architectural-Grade LED Wall Sconce

RAB Lighting is committed to creating high-quality, affordable, well-designed and energy-efficient LED lighting and controls that make it easy for electricians to install and end users to save energy. We'd love to hear your comments. Please call the Marketing Department at 888-RAB-1000 or email: marketing@rablighting.com

NEW CONSTRUCTION INSTALLATION
(models w/wall box)

Wall box is installed before sheetrock.

1. Remove **Driver/LED/Wall Plate** assembly by loosening 4 Phillips head screws as shown in **Figure 1**. No need to completely remove screws—keyhole slots provided. Retain **Hanger**. Unplug connectors (if E2, E2/MVS, E2, E2/BL, or E2/LC) and put **Driver/LED/Wall Plate** aside.
2. Install **Nailer Bars** into wall box as shown in **Figure 2**.
3. Locate the wall box in the desired position between the studs and affix using **Nailer Bars**.
4. Tighten 1 Phillips head locating screw shown in **Figure 2** to hold wall box in position on the **Nailer Bars**.
5. Run wire to box.

FIG.1

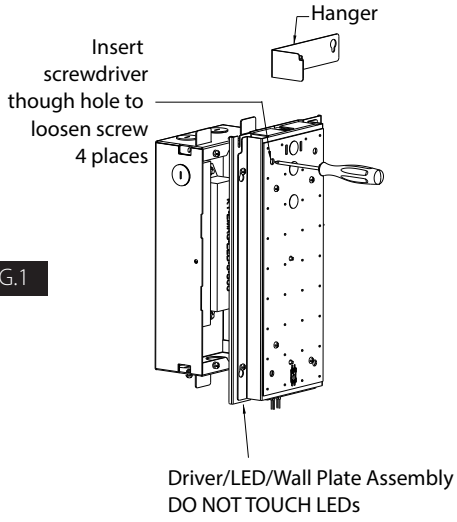

REMODELER INSTALLATION
(models w/wall box)

Wall box is installed after sheetrock.

1. Remove **Driver/LED/Wall Plate** assembly by loosening 4 Phillips head screws as shown in **Figure 1**. No need to completely remove screws—keyhole slots provided. Retain **Hanger.** Unplug connectors (if E2, E2/MVS, E2, E2/BL, or LC/E2) and put **Driver/LED/Wall Plate** aside.
2. Discard **Nailer Bars**.
3. Move **Stop Brackets** from end to side and add **Sheetrock Clamps** as shown in **Figure 3**.
4. Using the template provided, cut opening in sheetrock. Leave at least ¾" between box and stud.
5. Run wire to box.
6. Place wall box in opening and tighten 4 Phillips head screws to secure wall box.

FIG.2

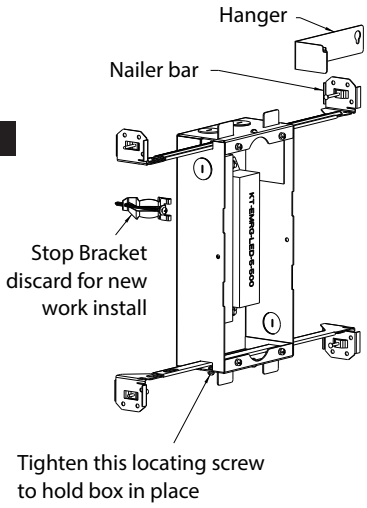

FIG.3

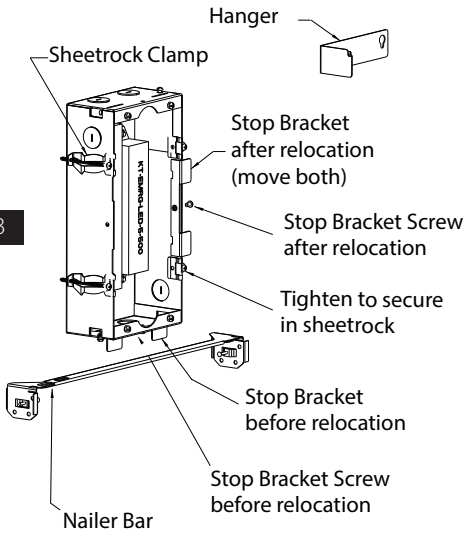

INSTRUCTIONS

HALV Indoor Architectural-Grade LED Wall Sconce

RAB Lighting is committed to creating high-quality, affordable, well-designed and energy-efficient LED lighting and controls that make it easy for electricians to install and end users to save energy. We'd love to hear your comments. Please call the Marketing Department at 888-RAB-1000 or email: marketing@rablighting.com

DRIVER/LED/WALL PLATE/ASSEMBLY *(with E2, E2/MVS, E2/BL, or LC/E2 options)*

1. Hang **Driver/LED/Wall Plate** assembly on **Hanger** as shown in **Figure 4.**
2. Mate connectors, except for battery connection. Make wiring connections.
3. Energize fixture. Mate battery connection.
4. Remove **Hanging Bracket** and place in bottom of box for future use.
5. Install ***Driver/LED/Wall Plate*** and tighten 4 Phillips head screws.

DRIVER/LED/WALL PLATE/ASSEMBLY *(with /LC option)*

1. Hang **Driver/LED/Wall Plate** assembly on **Hanger Bracket** as shown in **Figure 4**.
2. Make wire connections.
3. Remove **Hanger Bracket** and place in bottom of box for future use.
4. Install **Driver/LED/Wall Plate** and tighten 4 Phillips head screws.

FIG.4

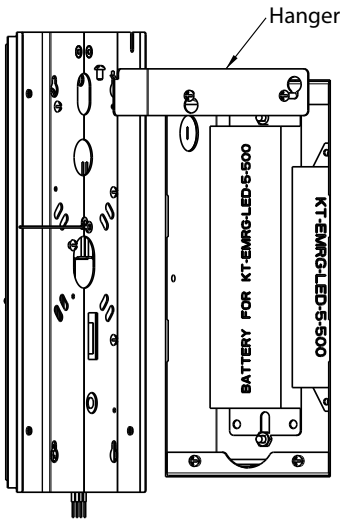

LENS FRAME INSTALLATION

1. Align **Lens Frame** over the **Driver/LED Assembly** with the Phillips head **Mounting Screw** at the top. See **Figure 5**.
2. Inset the **Lens Frame** from the bottom with the bottom flush against the wall. See **Figure 5**.
3. Tilt the top of the **Lens Frame** to the wall.
4. Make sure the frame is flush against the wall and tighten **Mounting Screw** at the top using a 5/64" hex key.

FIG.5

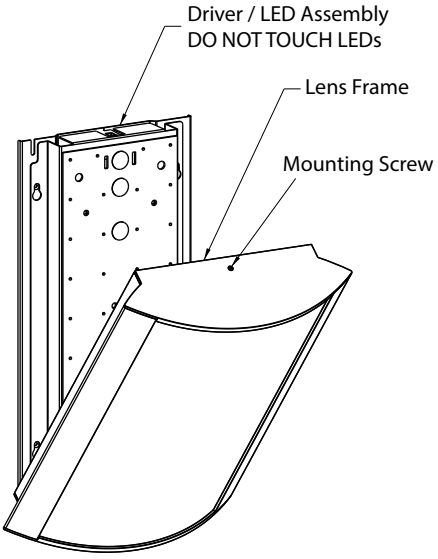

INSTRUCTIONS

HALV Indoor Architectural-Grade LED Wall Sconce

RAB Lighting is committed to creating high-quality, affordable, well-designed and energy-efficient LED lighting and controls that make it easy for electricians to install and end users to save energy. We'd love to hear your comments. Please call the Marketing Department at 888-RAB-1000 or email: marketing@rablighting.com

WIRING DIAGRAMS

NO OPTION

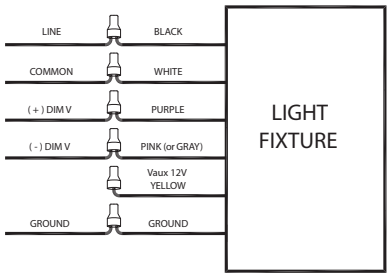

BL OPTION

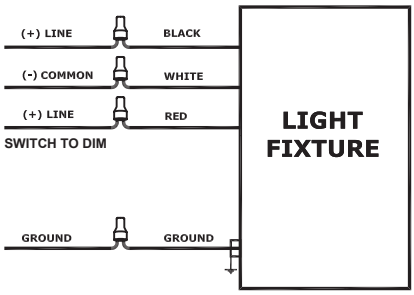

MVS & LC OPTIONS

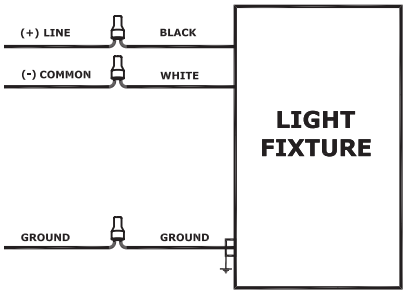

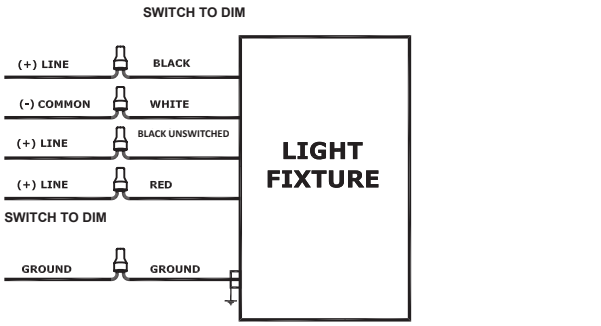

E2 OPTIONS

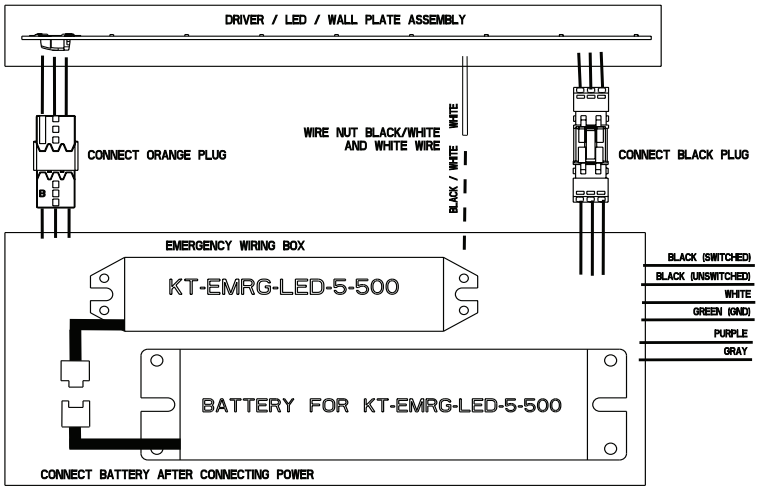

MVS & LC/E2 OPTIONS

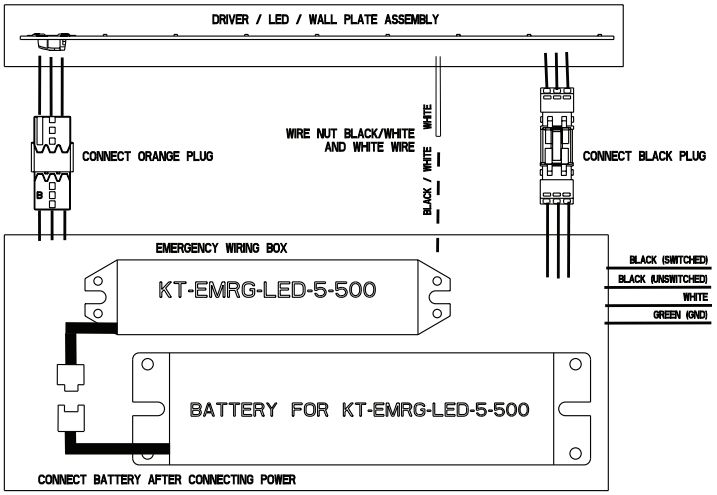

INSTRUCTIONS

HALV Indoor Architectural-Grade LED Wall Sconce

RAB Lighting is committed to creating high-quality, affordable, well-designed and energy-efficient LED lighting and controls that make it easy for electricians to install and end users to save energy. We'd love to hear your comments. Please call the Marketing Department at 888-RAB-1000 or email: marketing@rablighting.com

TROUBLESHOOTING

1. Check that the line voltage at the fixture is correct. Refer to wiring directions.
2. Be sure the fixture is grounded properly.

CLEANING AND MAINTENANCE

1. Use warm water, mild soap and a soft sponge or cloth. Any acrylic cleaner may also be used. Do not use alcohol, glass cleaners, acetone, lacquer thinner, solvents or abrasive compounds. Do not use squeegees, scrapers or synthetic rags that may scratch the panels.
   a. Lumicor® lenses – Novus® cleaner and polish is an approved product for a clean shine that also protects from static build up. See the "General Polishing & Basic Scratch Repair" document at www.lumicor.com/ScratchRepair for more information.
2. **DO NOT OPEN THE FIXTURE TO CLEAN THE LEDs. DO NOT TOUCH THE LEDs**.

DIMENSIONAL DRAWINGS

LENS FRAME ASSEMBLY *(STANDARD MODELS)*

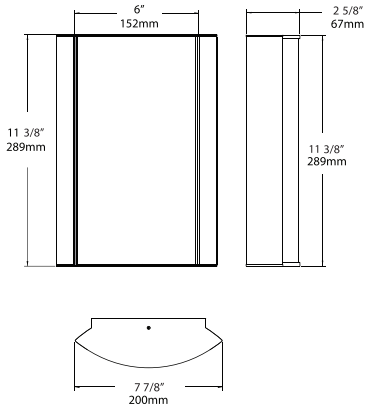

LENS FRAME ASSEMBLY *(MODELS WITH BACK BOX)*

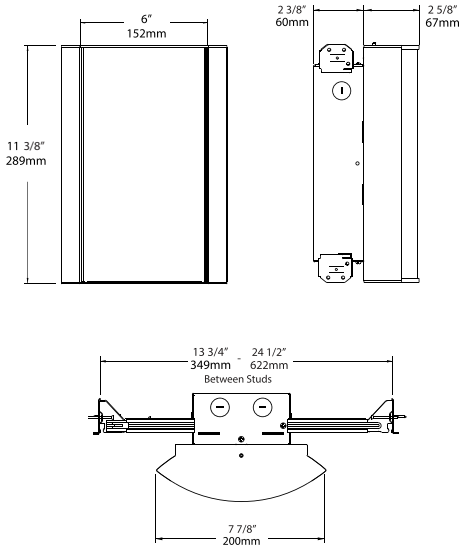

DECORATIVE LENS

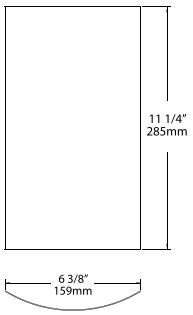

Note: *These instructions do not cover all details or variations in equipment nor do they provide for every possible situation during installation, operation or maintenance.*

© 2022 RAB LIGHTING Inc.

HALV-IN 1221
73625-RAB

Easy Answers

rablighting.com
Visit our website for product info

Tech Help Line
Call our experts: 888 722-1000

e-mail
Answered promptly - sales@rablighting.com

Free Lighting Layouts
Answered online or by request

RAB WARRANTY: *RAB's warranty is subject to all terms and conditions found at rablighting.com/warranty.*

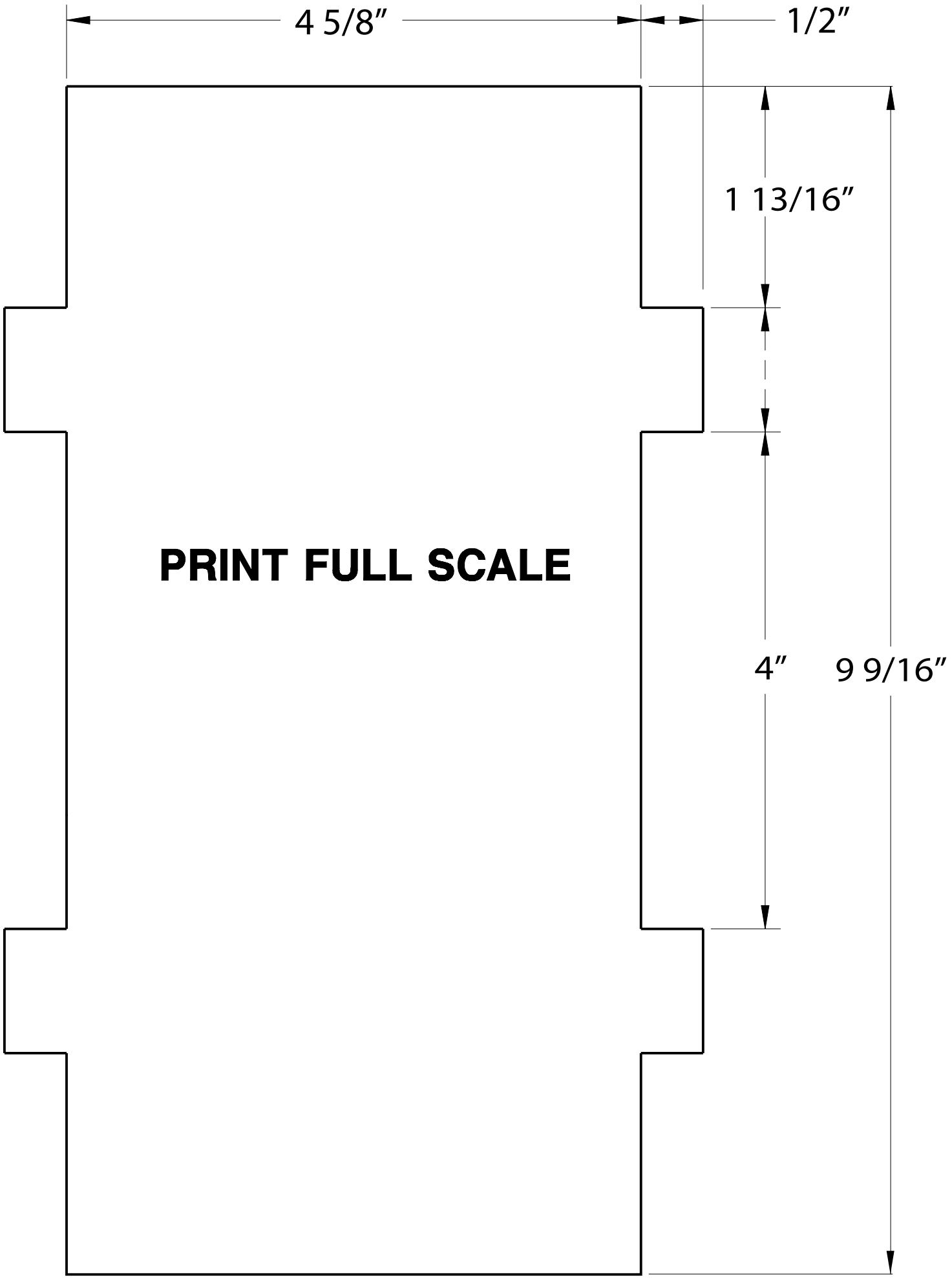
4 5/8″
1/2″
1 13/16″
PRINT FULL SCALE
4″
9 9/16″