GUS17-4/PIR/E

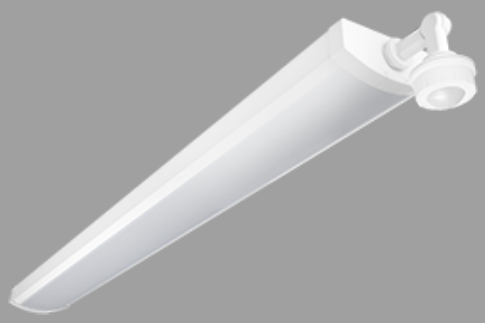

Color: White

Weight: 9.8 lbs

Project:	**Type:**
Prepared By:	**Date:**

Driver Info

Type	Constant Current
120V	0.42A/0.34A/0.25A
208V	0.25A/0.20A/0.15A
240V	0.22A/0.17A/0.13A
277V	0.19A/0.15A/0.11A
Input Watts	50/40/30W

LED Info

Watts	50/40/30W
Color Temp	3500K/4000K/5000K
Color Accuracy	82-86 CRI
L70 Lifespan	50,000 Hours
Lumens	3,662-5,873 lm
Efficacy	115.4-128.1 lm/W

Technical Specifications

Field Adjustability

Field Adjustable:
Field Adjustable Light Output:
50W/40W/30W (factory default 50W)
Color temperature selectable by 5000K, 4000K and 3500K (factory default 4000K)

Compliance

UL Listed:
Suitable for damp locations

IESNA LM-79 & LM-80 Testing:
RAB LED luminaires and LED components have been tested by an independent laboratory in accordance with IESNA LM-79 and LM-80.

DLC Listed:
This product is on the Design Lights Consortium (DLC) Qualified Products List and is eligible for rebates from DLC Member Utilities. Designed to meet DLC 5.1 requirements.
DLC Product Code: S-OZBJQS (Low-Bay Luminaires for Commercial and Industrial Buildings)
DLC Product Code: S-Y281AB (Direct Linear Ambient Luminaires)

Electrical

Driver:
Constant Current, Class 2, Class P, 120-277V, 50/60 Hz
50W: 120V: 0.42A, 208V: 0.25A, 240V: 0.22A, 277V: 0.19A
40W: 120V: 0.34A, 208V: 0.2A, 240V: 0.17A, 277V: 0.15A
30W: 120V: 0.25A, 208V: 0.15A, 240V: 0.13A, 277V: 0.11A

Dimming Driver:
Driver includes dimming control wiring for 0-10V dimming systems. Requires separate 0-10V DC dimming circuit. Dims down to 10%.

THD:
6.6% at 120V, 14.51% at 277V

Power Factor:
99.56% at 120V, 95.91% at 277V

Surge Protection:
L-N: 1KV
L/N-PG: 2KV

Battery Backup:
Battery backup will operate the fixture for 90 minutes if power fails. Wired for 120-277V.

Battery Backup Light Loss Factor:
50W: 0.19
40W: 0.24
30W: 0.31

Performance

Lifespan:
50,000-Hour LED lifespan based on IES LM-80 results and TM-21 calculations

Wattage Equivalency:
50W: Replaces up to (3) F32T8
40W: Replaces up to (2) F32T8
30W: Replaces up to (2) F32T8

LED Characteristics

LEDs:
Long-life, high-efficiency, surface-mount LEDs

Color Uniformity:
RAB's range of Correlated Color Temperature follows the guidelines of the American National Standard for Specifications for the Chromaticity of Solid State Lighting (SSL) Products, ANSI C78.377-2017.

Construction

Cold Weather Starting:
The minimum starting temperature is 0°C (32°F)

Copyright © 2024 RAB Lighting All Rights Reserved Note: Specifications are subject to change at any time without notice

Technical Specifications (continued)

Maximum Ambient Temperature:
Suitable for use in up to 50°C (122°F)

Housing:
Color coated steel sheets

Lens:
Polycarbonate lens

Mounting:
Surface mount. Can be mounted with v-hooks (ordered separately).

Finish:
Formulated for high durability and long-lasting color

Green Technology:
Mercury and UV free. RoHS-compliant components.

Sensor Specifications

PIR Sensor Factory Settings:
Brightness: 100%
Hold Time: 1 Minute
Daylight: Disabled
Senstivity: 100%
Stand-By Dimming Level: 20%
Stand-By Time: 1 Minute

Operating Voltage:
12 ± 2V DC

Operating Current:
30mA

Output:
DIM 0-10V

Stand-By Power:
<0.5W

Brightness:
0%-100%/Quick setting: 70%/80%/90%/100%

Hold Time:
10s/1min/10min/30min

Daylight Threshold:
10Lux/30Lux/50Lux/100Lux/Disable

Lux On-Off:
Adopted dual PD technology. GUS17-PIR is able to differenciate artificial light brightness from natural light after installed inside.

Stand-By Time:
1min/30min/60min/+∞

Stand-By Dimming Level:
10%/20%/30%/50%

Detection Angle:
≤120° (wall mounted) 360° (ceiling mounted)

Control Line:
Black White 12V+ ; Purple: DIM+ ; Pink GND/DIM-

Mounting Height:
Max 6M (ceiling mounted)

Detection Range:
Max 8m (ceiling mounted) Max 6m(wall mounted)

Operating Temperature:
-30°C to 60°C (-22°F to 140°F)

Remote Control Accessory:
Adjust settings using remote control (catalog# MSR1). Only available with 0-10V dimming driver options. Remote control available here.

Other

5 Yr Limited Warranty:
The RAB 5-year, limited warranty covers light output, driver performance and paint finish. RAB's warranty is subject to all terms and conditions found at rablighting.com/warranty.

Buy American Act Compliance:
RAB values USA manufacturing! Upon request, RAB may be able to manufacture this product to be compliant with the Buy American Act (BAA). Please contact customer service to request a quote for the product to be made BAA compliant.

Copyright © 2024 RAB Lighting All Rights Reserved Note: Specifications are subject to change at any time without notice

GUS17-4/PIR/E

Dimensions

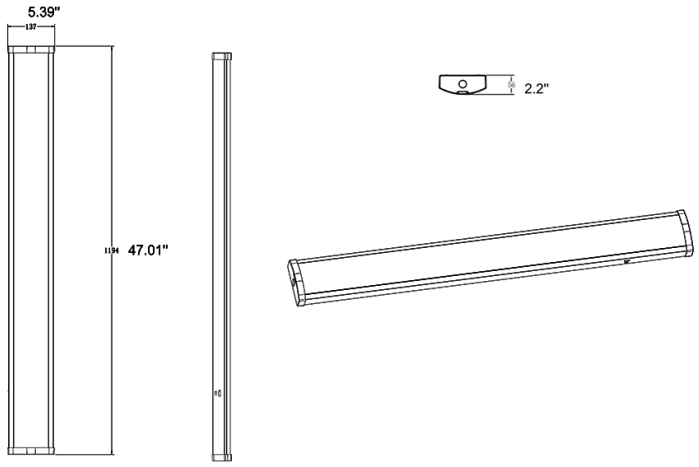

Features

- 50,000-Hour LED lifespan
- 0-10V dimming standard
- DLC Listed
- 5-Year, limited warranty

Ordering Matrix

Family	Size/Wattage	Color Temp	Voltage	Finish	Options
GUS17	4				/PIR/E
	2 = 2ft (25/20/15W) **4 =** 4ft (50/40/30W)	**Blank =** 3500K/4000K/5000K CCT Adjustable	**Blank =** 120-277V, 0-10V Dimming	**Blank =** White	**Blank =** No Option **/E =** Battery Backup **/PIR =** Passive Infrared Occupancy Sensor **/MVS =** Microwave Occupancy Sensor **/LCBS =** Lightcloud Blue Enabled w/PIR Sensor **/LCBS/MVS =** Lightcloud Blue Enabled w/MVS Sensor **/PIR/E =** Passive Infrared Occupancy Sensor w/Battery Back Up **/MVS/E =** Microwave Occupancy Sensor w/Battery Back Up **/LCBS/E =** Lightcloud Blue PIR Sensor w/Battery Back Up **/LCBS/MVS/E =** Lightcloud Blue Microwave Occupancy Sensor w/Battery Backup

Copyright © 2024 RAB Lighting All Rights Reserved Note: Specifications are subject to change at any time without notice