INSTRUCTIONS
H17™ FIELD-ADJUSTABLE INSTALLATION

RAB Lighting is committed to creating high-quality, affordable, well-designed and energy-efficient LED lighting and controls that make it easy for electricians to install and end users to save energy. We'd love to hear your comments. Please call the Marketing Department at 888-RAB-1000 or email: marketing@rablighting.com



H17 / H17S



H17XL



H17XXL



H17XXL/480

IMPORTANT

READ CAREFULLY BEFORE INSTALLING FIXTURE. RETAIN THESE INSTRUCTIONS FOR FUTURE REFERENCE.
RAB fixtures must be wired in accordance with the National Electrical Code and all applicable local codes. Proper grounding is required for safety. THIS PRODUCT MUST BE INSTALLED IN ACCORDANCE WITH THE APPLICABLE INSTALLATION CODE BY A PERSON FAMILIAR WITH THE CONSTRUCTION AND OPERATION OF THE PRODUCT AND THE HAZARDS INVOLVED.
WARNING: Make certain power is OFF before installing or maintaining the fixture. No user serviceable parts inside.
Suitable for wet locations. Maximum ambient temperature suitable for use in up to 50°C *(122°F)*.

HOOK MOUNTING

1. Screw the **Hook** into the **Fixture**, tighten and secure with Set Screw *(Fig. 1)*.
2. Hang the **Fixture** on a ceiling hook or chain *(by others)*. Ensure the **Tether Cable** ***(only for H17XXL and H17XXL/480)*** is secured on the Fixture. Secure the other end of the **Tether Cable** to the mounting structure as shown in Fig. 2.
3. After installation, connect the fixture wires to power supply. Use appropriate UL approved wire connectors as required by code to complete wiring *(Fig. 27 and 28)*.

Fig: 1

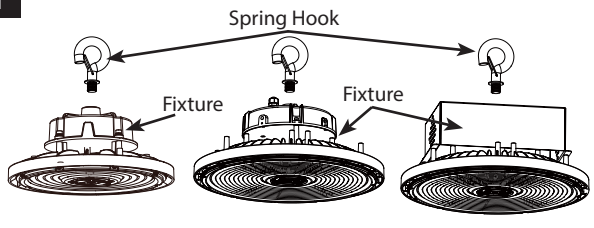

Fig: 2

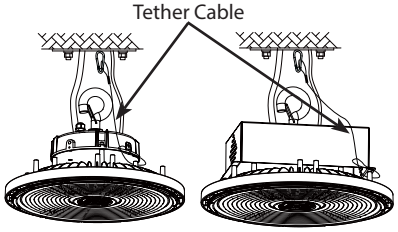

SURFACE MOUNTING

Accessory ordered separately - Model # H17-SM Kit H17XXL-SM KIT.

1. Align the **Surface Mount Kit** screw holes with the **Heat Sink** as shown in Fig. 3 and install the **Surface Mount Kit** onto the **Heat Sink** with *(4)* **Screws** *(provided)* as shown in Fig. 4.
2. Secure the **Surface Mount Kit** to mounting surface *(Fig. 5)*.
3. After installation, connect the fixture wires to power supply. Use appropriate UL approved wire connectors as required by code to complete the wiring *(Fig. 27 and 28)*.
4. Loosen **Pivot Bolts** and swivel the fixture to the desired angle. Fixture can adjust 50° to the left or right vertically *(Fig. 6)*, tighten **Pivot Bolts**.

Fig: 3

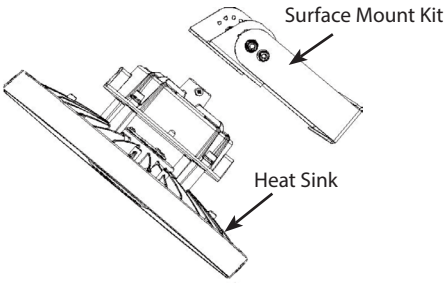

Fig: 4

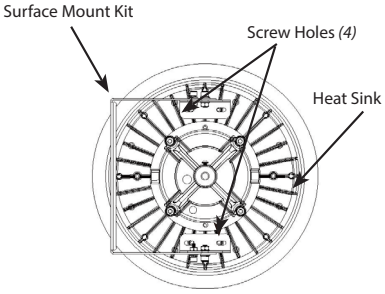

INSTRUCTIONS
H17™ FIELD-ADJUSTABLE INSTALLATION

RAB Lighting is committed to creating high-quality, affordable, well-designed and energy-efficient LED lighting and controls that make it easy for electricians to install and end users to save energy. We'd love to hear your comments. Please call the Marketing Department at 888-RAB-1000 or email: marketing@rablighting.com

Fig: 5

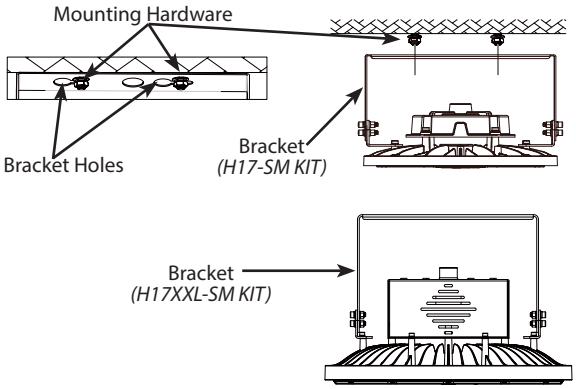

Fig: 6

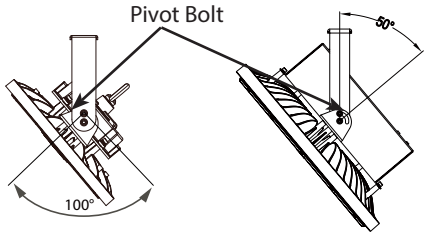

PENDANT MOUNTING

Accessory ordered separately - Model # H17-PM KIT
H17B-PM KIT

1. Loosen **Set Screws** on the Fixture as shown in *(Fig. 7)*. Mount the **Pendant Kit** onto the driver housing using *(1)* Bolt *(provided)* to secure the **Pendant Kit** to driver housing, tighten **Set Screw**.
2. Insert **3/4" NTP Pendant Stem** *(by others)* **into** *t*he Pendant Kit secure with **Set Screw** *(Fig. 8 and 9)*.
3. After installation, connect the fixture wires to power supply. Use appropriate UL approved wire connectors as required by code to complete wiring *(Fig. 27 and 28)*.

Fig. 7

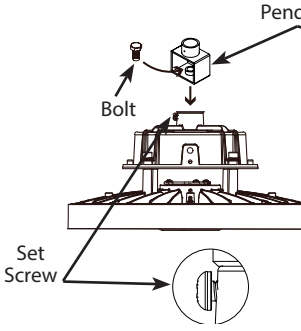

Fig. 8

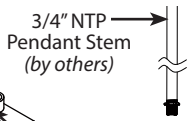

Fig. 9



FIELD-ADJUSTMENT

Follow instructions below to change fixture **Power** (*W*) and/or **Color Temperature** (*CCT*) from the factory settings.

Factory Settings:

H17S: 100W/4000K (120-277V ONLY)

H17: 150W/4000K (120-277V ONLY)

H17XL: 240W/4000K (120-277V ONLY)

H17XXL: 5000W/4000K (120-277V and 480V)

1. Locate the Field-Adjustable Switches on Fixture housing as shown below. Remove waterproof gasket**.**
2. Select **Power** *(W)* and/or **Color Temperature** *(CCT)* by sliding the respective switch to the desired value *(Fig. 10)*. Re-install the waterproof gasket.

Fig. 10

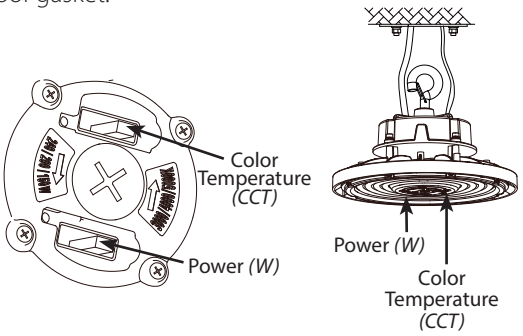

MOTION SENSOR INSTALLATION

Accessory ordered separately - Model # MVS50, PIR40
MVS50/LCB, PIR40/LCB. Optional remote MSR1 sold separately for custom settings.

1. Ensure power is off to the fixture to avoid risk of shock.
2. Be sure to remove Sensor pin protector from the sensor before installing.
3. Remove **1/2" Knockout** with a screwdriver and install the **Sensor Kit** onto fixture *(Fig. 11)***.** ***Caution do not over-tighten Sensor.***

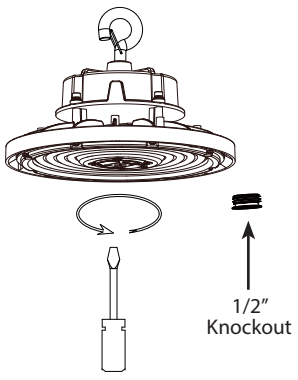

Fig. 11

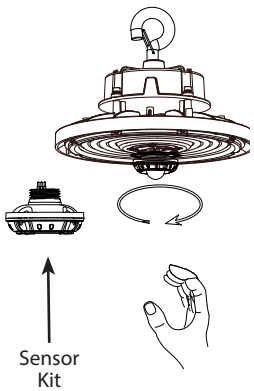

INSTRUCTIONS
H17™ FIELD-ADJUSTABLE INSTALLATION

RAB Lighting is committed to creating high-quality, affordable, well-designed and energy-efficient LED lighting and controls that make it easy for electricians to install and end users to save energy. We'd love to hear your comments. Please call the Marketing Department at 888-RAB-1000 or email: marketing@rablighting.com

POLYCARBONATE REFRACTOR MOUNTING
(ACCESSORY KIT, DO NOT USE WITH H17XXL)

Accessory ordered separately - Model # H17-RPC and H17XL-RPC.

1. Align the Refractor **Screw Holes** with the **Heat Sink** as shown in Fig. 12 and 13.
2. Install **Refractor** onto the **Heat Sink** as shown in Fig. 14. Secure the **Refractor** to the **Heat Sink** with *(4)* **Screws** *(provided)*, as shown in Fig. 15.

Fig. 12

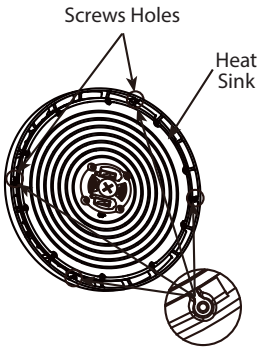

Fig.13

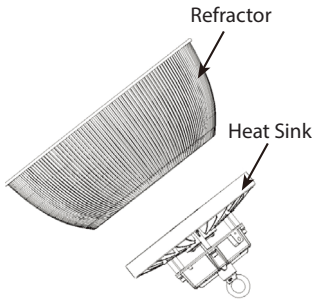

Fig. 14

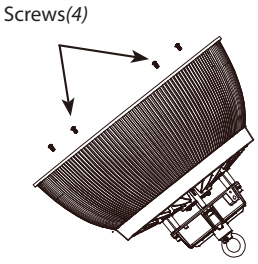

Fig. 15

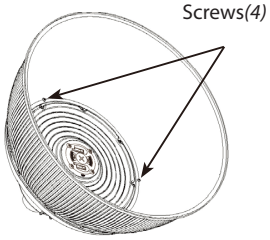

DROP LENS MOUNTING
(ACCESSORY KIT, DO NOT USE WITH H17XXL)

Accessory ordered separately - Model # H17-RDL, H17XL-RDL.

1. Place the **Drop Lens** on the **Reflector** as shown in Fig.16 and 17.
2. Clamp the **Steel Ring** onto the **Drop Lens** and secure with **Spring** as shown in Fig.18 and 19.

Fig.16

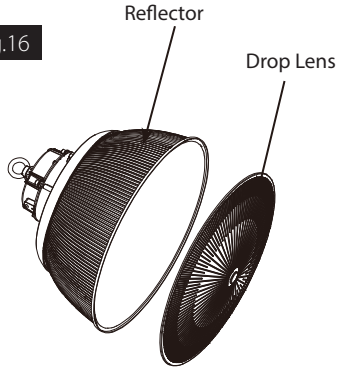

Fig.17

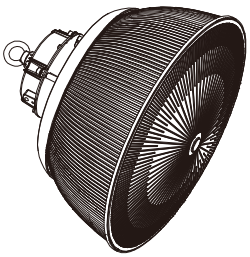

Fig.18

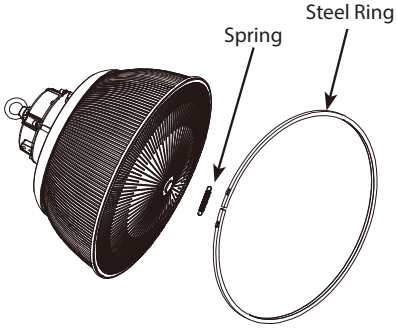

Fig.19

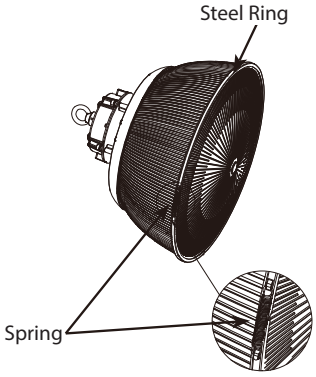

INSTRUCTIONS

H17™ FIELD-ADJUSTABLE INSTALLATION

RAB Lighting is committed to creating high-quality, affordable, well-designed and energy-efficient LED lighting and controls that make it easy for electricians to install and end users to save energy. We'd love to hear your comments. Please call the Marketing Department at 888-RAB-1000 or email: marketing@rablighting.com

ALUMINUM REFLECTOR MOUNTING

Accessory ordered separately - Model # H17-RAL, H17XL-RAL H17XXL-RAL.

1. Align the **Reflector Screw Holes** with the **Heat Sink** as shown in Fig. 20 and 21.
2. Install **Reflector** onto the **Heat Sink** as shown in Fig. 22.
3. Secure the **Reflector** to the **Heat Sink** with *(4)* **Screws** *(provided)* as shown in Fig. 23.

Fig. 20

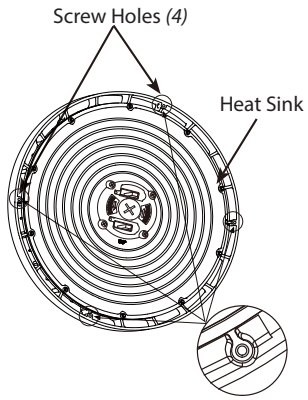

Fig. 21

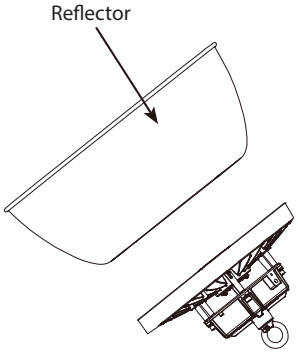

Fig. 22

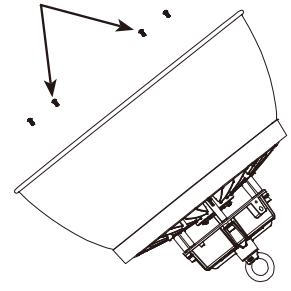

Fig. 23

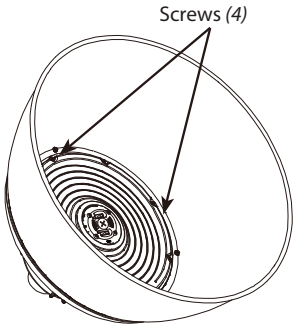

WIRE GUARD MOUNTING

Accessory ordered separately - Model # H17-WG, H17B-WG H17XL-WG, H17XLB-WG, H17XXL-WG, H17XXLB-WG

1. Align the **Wire Guard Screw Holes** with the **Heat Sink** as shown in Fig. 24 and 25.
2. Install the **Wire Guard** onto the **Heat Sink**.
3. Secure the **Wire Guard** to the **Heat Sink** with *(4)* **Screws** *(provided)* as shown in Fig. 26.

Fig. 24

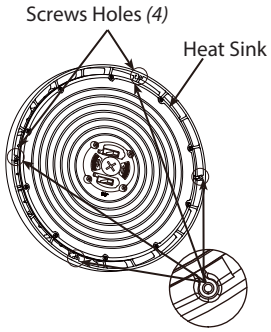

Fig. 25

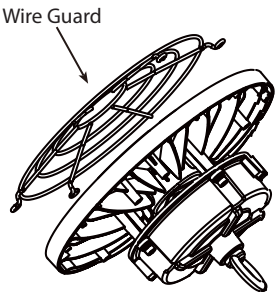

Fig. 26

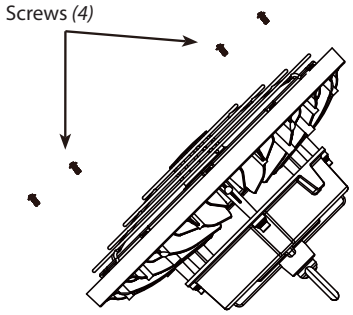

INSTRUCTIONS
H17™ FIELD-ADJUSTABLE INSTALLATION

RAB Lighting is committed to creating high-quality, affordable, well-designed and energy-efficient LED lighting and controls that make it easy for electricians to install and end users to save energy. We'd love to hear your comments. Please call the Marketing Department at 888-RAB-1000 or email: marketing@rablighting.com

BATTERY BACKUP

For Battery Backup accessory, see EMHB30, EMHB30/LCB, EMHB30/B, EMHB60, EMHB60/LCB, EMHB60/B.

WIRING

RISK OF FIRE. Universal voltage driver permits operation at 120V through 277V, 50 or 60 Hz. Units ordered with /480V suffix are 480V only, 50 or 60Hz. For 0-10V dimming follow wiring directions as shown in Fig. 27. For non-dimming *(on/off)*, follow wiring directions as shown in Fig. 28.

Fig. 27

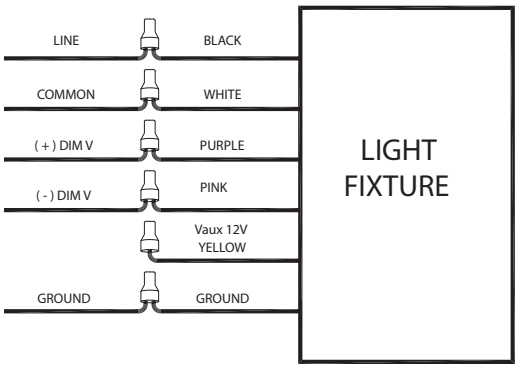

Fig. 28

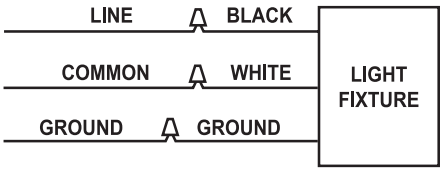

CLEANING & MAINTENANCE

CAUTION: Be sure fixture temperature is cool enough to touch. Do not clean or maintain while fixture is energized.

1. Do not open fixture to clean the LED. Do not touch the LED.
2. Do not touch reflector, lens or trim cone.
3. Do not clean any fixture surface with wood-base cleaning material such as paper towels or tissues.

TROUBLESHOOTING

1. Check that the line voltage at the fixture is correct. Refer to wiring directions.
2. Is the fixture grounded properly?

Note: *These instructions do not cover all details or variations in equipment nor do they provide for every possible situation during installation, operation or maintenance.*

© 2024 RAB LIGHTING Inc.
H17 - 0324
P-100099

Easy Answers

rablighting.com
Visit our website for product info

Tech Help Line
Call our experts: 888 722-1000

e-mail
Answered promptly - sales@rablighting.com

Free Lighting Layouts
Answered online or by request

RAB WARRANTY: *RAB's warranty is subject to all terms and conditions found at rablighting.com/warranty.*