KNOOKFA8



Undercabinet LED designed to provide soft, uniform lighting on work surfaces.

Color: Brown

Weight: 0.9 lbs

Project:	**Type:**
Prepared By:	**Date:**

Driver Info

Type	Constant Current
120V	0.04A
208V	N/A
240V	N/A
277V	N/A
Input Watts	2.4-4.4W

LED Info

Watts	4W
Color Temp	2700K/3000K/3500K/4000K/5000K
Color Accuracy	93-97 CRI
L70 Lifespan	50,000 Hours
Lumens	164-353 lm
Efficacy	64-81 lm/W

Technical Specifications

Field Adjustability

Field Adjustable:
Lumen output (selectable by 100% and 50%)
Color temperature (selectable by 2700K, 3000K, 3500K, 4000K and 5000K)

Compliance

UL Listed:
Dry Locations Only

IESNA LM-79 & LM-80 Testing:
RAB LED luminaires and LED components have been tested by an independent laboratory in accordance with IESNA LM-79 and LM-80.

Energy Star Approved:
This product is ENERGY STAR® Version 2.2 Certified

Energy Star ID:
2421018

Trade Agreements Act Compliant:
This product is a product of Cambodia and a "designated country" end product that complies with the Trade Agreements Act

LED Characteristics

LEDs:
Long-life, high-efficacy, surface-mount LEDs

Color Stability:
LED color temperature is warrantied to shift no more than 200K in color temperature over a 5-year period

Color Uniformity:
RAB's range of Correlated Color Temperature follows the guidelines of the American National Standard for Specifications for the Chromaticity of Solid State Lighting (SSL) Products, ANSI C78.377-2017.

Performance

Lifespan:
50,000-Hour LED lifespan based on IES LM-80 results and TM-21 calculations

Construction

Maximum Ambient Temperature:
Suitable for use in up to 40°C (104°F)

Housing:
Die-formed steel with injection-molded endcaps

Lens:
Polycarbonate lens

Reflector/Tray:
Aluminum

Mounting:
Undercabinet surface

Green Technology:
Mercury and UV free. RoHS-compliant components.

Finish:
Formulated for high durability and long-lasting color

Other

Warranty:
RAB warrants that our LED products with special corrosion resistant powder coat finish will be free from defects in materials and workmanship for a period of five (5) years from the date of delivery to the end user, including coverage of light output, color stability, driver performance and fixture finish in corrosive environments up to C5-M classification. RAB's warranty is subject to all terms and conditions found at rablighting.com/warranty.

Buy American Act Compliance:
RAB values USA manufacturing! Upon request, RAB may be able to manufacture this product to be compliant with the Buy American Act (BAA). Please contact customer service to request a quote for the product to be made BAA compliant.

Electrical

Driver:
Constant Current, Class 2, 60 Hz, 120V: 0.04A

Copyright © 2024 RAB Lighting All Rights Reserved Note: Specifications are subject to change at any time without notice

Technical Specifications (continued)

THD:
3.8% at 120V

Power Factor:
99.3% at 120V

Dimensions

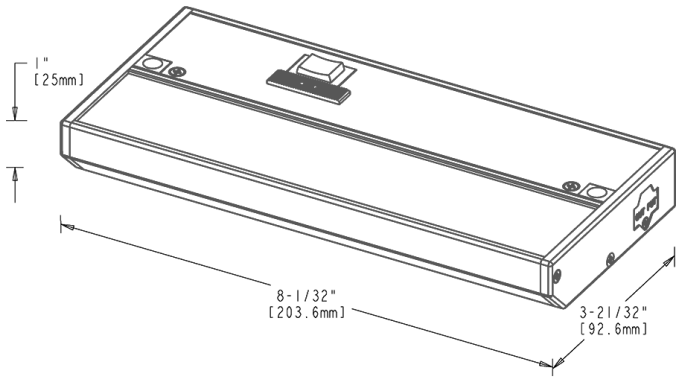

Features

- 5 discrete color temperatures
- Simple to connect multiple fixtures
- Available in four sizes (8", 16", 24" and 32") and two color finishes (white & brown)
- Compatible with common ELV & TRIAC dimmers

Ordering Matrix

Family	Length (Wattages)	Color Temp	Finish	Voltage
KNOOKFA	8			
	8 = 8" (4/2W) **16 =** 16" (9/5W) **24 =** 24" (13/7W) **32 =** 32" (16/8W)	**Blank =** 2700K/3000K/3500K/4000K/5000K	**Blank =** Brown **W =** White	**Blank =** 120V

Copyright © 2024 RAB Lighting All Rights Reserved Note: Specifications are subject to change at any time without notice