L34-180N



An ultra-economy, linear high bay with innovative, adjustable fold-up wings that let you put light where you need it.

Color: White

Weight: 6.0 lbs

Project:	**Type:**
Prepared By:	**Date:**

Driver Info

Type	Constant Current
120V	1.50A
208V	0.87A
240V	0.75A
277V	0.65A
Input Watts	159.6W

LED Info

Watts	160W
Color Temp	4000K (Neutral)
Color Accuracy	84 CRI
L70 Lifespan	50,000 Hours
Lumens	20,823 lm
Efficacy	130.5

Technical Specifications

Compliance

UL Listed:
Suitable for damp locations

IESNA LM-79 & LM-80 Testing:
RAB LED luminaires and LED components have been tested by an independent laboratory in accordance with IESNA LM-79 and LM-80.

DLC Listed:
This product is on the Design Lights Consortium (DLC) Qualified Products List and is eligible for rebates from DLC Member Utilities. Designed to meet DLC 5.1 requirements.
DLC Product Code: S-LOTMUI

Performance

Lifespan:
50,000-Hour LED lifespan based on IES LM-80 results and TM-21 calculations

Wattage Equivalency:
Equivalent to 400W Metal Halide

Electrical

Driver:
Constant Current, Class 2, Class P, 120-277V, 50/60 Hz, 120V: 1.50A, 208V: 0.87A, 240V: 0.75A, 277V: 0.65A

Dimming Driver:
Driver includes dimming control wiring for 0-10V dimming systems. Requires separate 0-10V DC dimming circuit. Dims down to 10%.

THD:
5.09% at 120V, 8.59% at 277V

Power Factor:
99.9% at 120V, 93.9% at 277V

Surge Protection:
2.5kV

LED Characteristics

LEDs:
Long-life, high-efficacy, discrete, surface-mount LEDs

Color Consistency:
7-step MacAdam Ellipse binning to achieve consistent fixture-to-fixture color

Color Uniformity:
RAB's range of Correlated Color Temperature follows the guidelines of the American National Standard for Specifications for the Chromaticity of Solid State Lighting (SSL) Products, ANSI C78.377-2017.

Construction

Cold Weather Starting:
The minimum starting temperature is -20°C (-4°F)

Maximum Ambient Temperature:
Suitable for use in up to 50°C (122°F)

Housing:
Polycarbonate and ABS (PC/ABS)

Mounting:
V-hooks and optional pendant mounting

Finish:
Formulated for high durability and long-lasting color

Green Technology:
Mercury and UV free. RoHS-compliant components.

Other

5 Yr Limited Warranty:
The RAB 5-year, limited warranty covers light output, driver performance and paint finish. RAB's warranty is subject to all terms and conditions found at rablighting.com/warranty.

Copyright © 2024 RAB Lighting All Rights Reserved Note: Specifications are subject to change at any time without notice

Technical Specifications (continued)

Buy American Act Compliance:
RAB values USA manufacturing! Upon request, RAB may be able to manufacture this product to be compliant with the Buy American Act (BAA). Please contact customer service to request a quote for the product to be made BAA compliant.

Dimensions

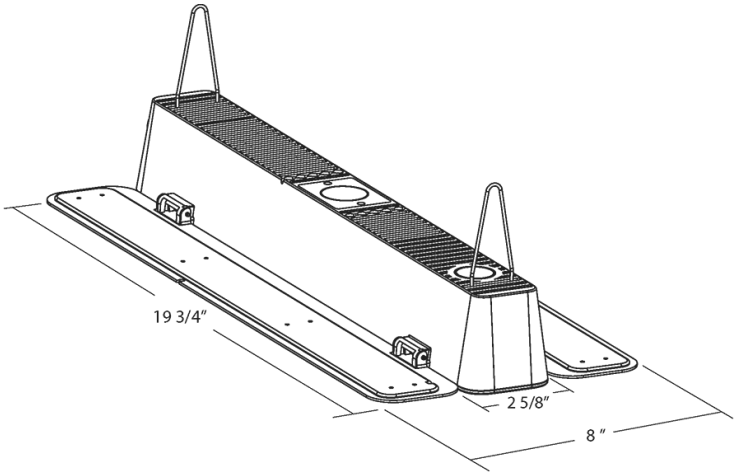

Features

- 50,000-Hour LED lifespan
- DLC listed
- 5-Year, limited warranty

Ordering Matrix

Family		Wattage	Color Temp	Finish	Options
L34	–	180	N		
		110 = 100W **180 =** 160W	**Blank =** 5000K **N =** 4000K	**Blank =** White	**Blank =** No Option **/LC =** Lightcloud Controller **/LCS =** Lightcloud Sensor **/MVS =** Microwave Occupancy Sensor

Copyright © 2024 RAB Lighting All Rights Reserved Note: Specifications are subject to change at any time without notice