MASI™ RETROPLATE INSTALLATION INSTRUCTIONS

Thank you for buying RAB lighting fixtures. Our goal is to design the best quality products to get the job done right. We'd like to hear your comments. Call the Marketing Department at 888-RAB-1000 or email: marketing@rabweb.com

IMPORTANT

READ CAREFULLY BEFORE INSTALLING FIXTURE. RETAIN THESE INSTRUCTIONS FOR FUTURE REFERENCE.

Fixtures must be wired in accordance with the National Electrical Code and all applicable local codes. Proper grounding is required for safety. THIS PRODUCT MUST BE INSTALLED IN ACCORDANCE WITH THE APPLICABLE INSTALLATION CODE BY A PERSON FAMILIAR WITH THE CONSTRUCTION AND OPERATION OF THE PRODUCT AND THE HAZARDS INVOLVED.

WARNING: Make certain power is OFF before installing or maintaining fixture. No user serviceable parts inside.

CAUTION:

- **For proper weatherproof function all gaskets must be seated properly and all screws inserted and tightened firmly.**
- **Apply weatherproof silicone sealant around the edge of the MASI, RETROPLATE and/or Driver Box. This is especially important with an uneven ceiling surface. Silicone all plugs and unused conduit entries.**
- **RETROPLATE must be secured to Canopy Deck and check gasket is fully sealed.**
- **Be sure RETROPLATE is mounted to a surface with no bigger than a 12in x 16in square or 12in diameter round hole.**
- **ONLY INSTALL FIXTURE WITH LENS FACING DOWNWARD.** Above Canopy Deck should be clear of obstructions.
- CANOPY DECK SHOULD BE STURDY AND STRUCTURALLY SOUND TO ACCEPT LUMINAIRES. 16IN MASI FIXTURE WEIGHS 27LBS AND 20 INCH MASI FIXTURE WEIGHS 34LBS.
- **FIXTURE CAN ONLY BE INSTALLED ONLY IN A CANOPY WITH 1/2IN THICKNESS OR LESS.**
- **SUITABLE FOR INSTALLATION IN ACCESSIBLE CEILINGS ONLY.**

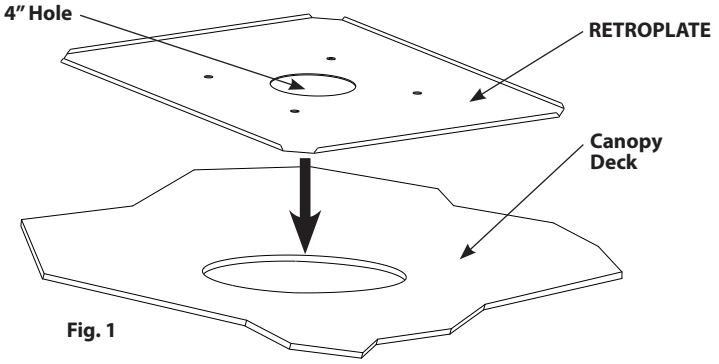

Fig. 1

CEILING MOUNTING

FIXTURE CAN ONLY BE INSTALLED IN CANOPY THICKNESS 1/2 INCH OR LESS. ABOVE ACCESS TO CANOPY REQUIRED. Install **RETROPLATE** to **Canopy Deck** with no more than a 12in x 16in square or 12in diameter hole. To mount **RETROPLATE,** follow the steps below.

1. Run silicone sealant around edges of the hole in **Canopy Deck** surface. Place **RETROPLATE** from above **Canopy Deck (Fig. 1).**
2. Insert **Studs** into the **Housing (Fig. 2)**. Push **Housing** up through **RETROPLATE 4" Hole** from below.
3. Secure **Housing** to **RETROPLATE** with **Silicone Washer**, **Metal Washer**, and **Nut (Fig. 3)** .
4. Mount **Driver Box** using same instructions on fixture installation and make electrical connections.
5. See **Fig. 4** for dimensions of **RETROPLATE** and hole distances. Use the appropriate mounting hardware to mount **RETROPLATE** and **MASI** to **Canopy Deck**. Be sure gasket is properly seated.
6. Re-latch **Driver Box** cover and check that gasket is fully sealed. Be careful not to pinch wires. Tighten all screws.
7. Use silicone or teflon tape on all plugs and on the threads of all conduit entry points. If outdoor surface is irregular, use caulk to seal any gaps around **MASI** (to be ordered separately) and **RETROPLATE**.

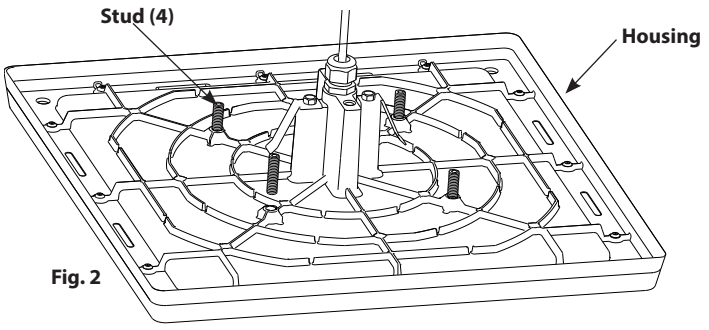

Fig. 2

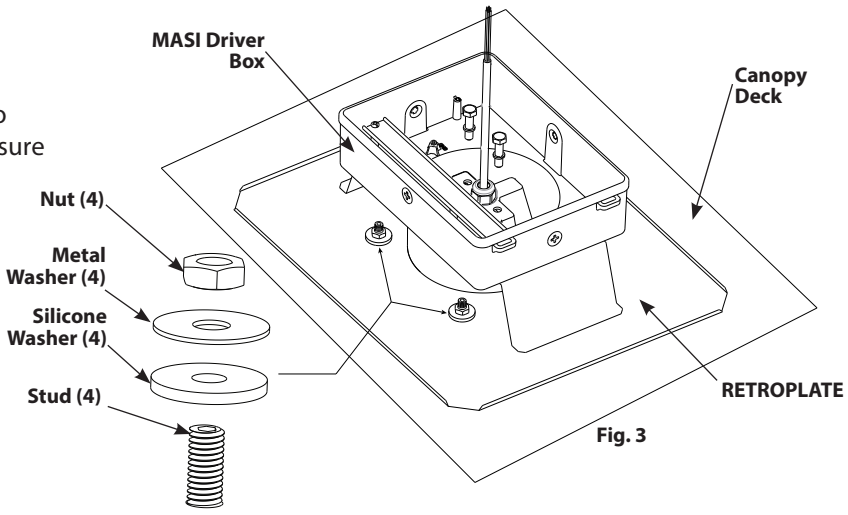

Fig. 3

MASI™ RETROPLATE INSTALLATION INSTRUCTIONS

Thank you for buying RAB lighting fixtures. Our goal is to design the best quality products to get the job done right. We'd like to hear your comments. Call the Marketing Department at 888-RAB-1000 or email: marketing@rabweb.com

HOLE LOCATION

UNITS: inches [mm]

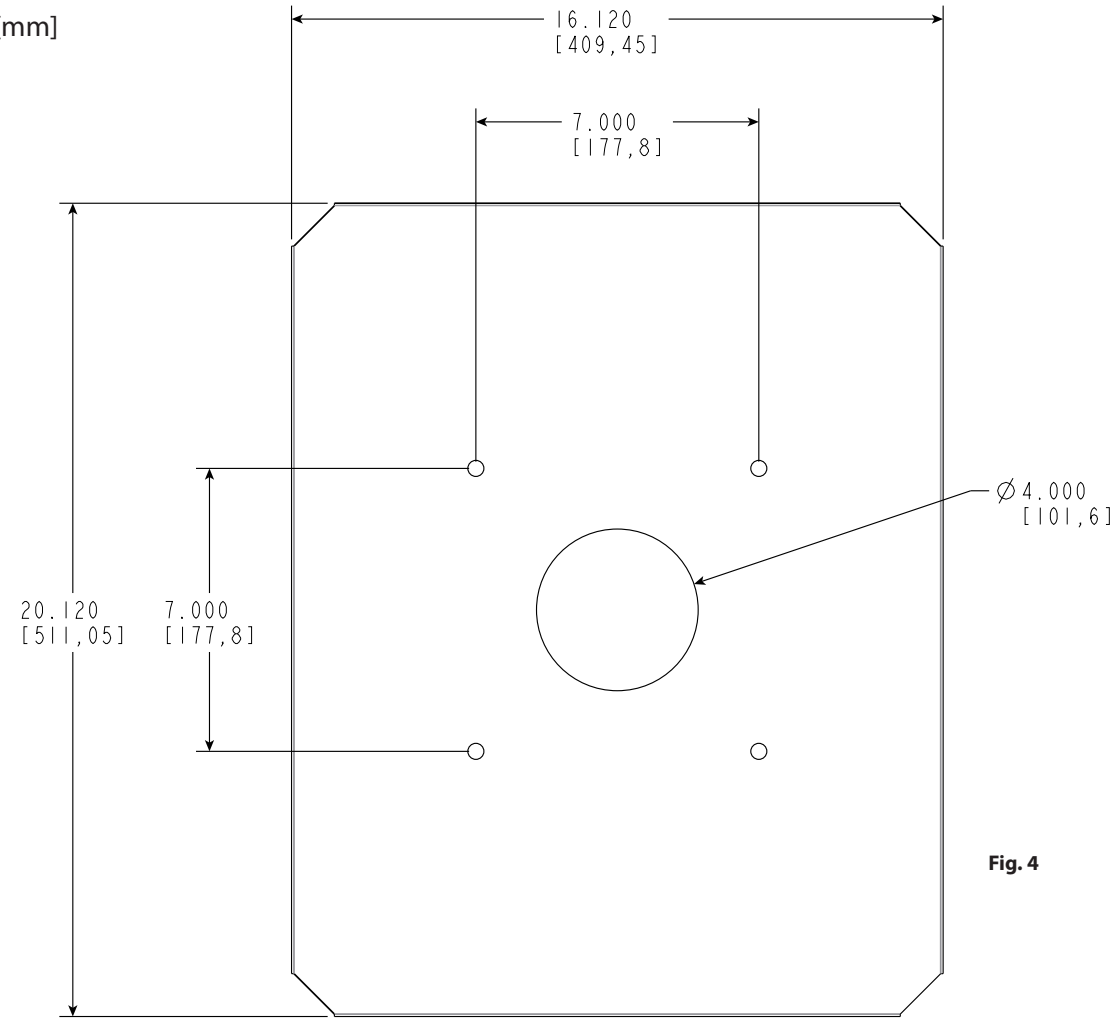

Fig. 4

CLEANING & MAINTENANCE

CAUTION: Be sure fixture temperature is cool enough to touch. Do not clean or maintain while fixture is energized.

1. Clean glass lens with non-abrasive cleaning solution.
2. Do not open the fixture to clean the LEDs. Do not touch the LEDs.

Note: These instructions do not cover all details or variations in equipment nor do they provide for every possible situation during installation operation or maintenance.

©2015 RAB LIGHTING Inc.
Northvale, New Jersey 07647 USA
MASI RETROPLATE IN 0715

Easy Installation & Product Help

Tech Help Line
Call our experts 888 RAB-1000

rabweb.com
Visit our website for product info

email
Answered promptly sales@rabweb.com