RTLED2X4

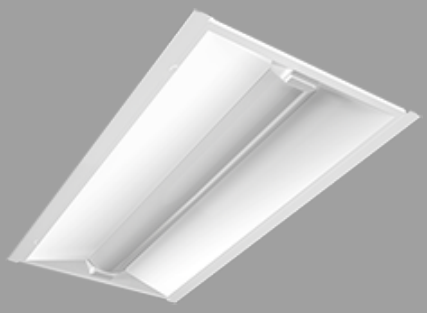

Color: White

Weight: 11.2 lbs

Project:	**Type:**
Prepared By:	**Date:**

Driver Info

Type	Constant
120V	0.30A/0.25A/0.21A
208V	0.17A/0.15A/0.12A
240V	0.15A/0.13A/0.10A
277V	0.13A/0.12A/0.10A
Input Watts	24.4-35.49W

LED Info

Watts	35/30/25W
Color Temp	3500K/4000K/5000K
Color Accuracy	84-85 CRI
L70 Lifespan	100,000 Hours
Lumens	3,435-4,955 lm
Efficacy	133.24-149.8 lm/W

Technical Specifications

Compliance

UL Listed:
Suitable for damp locations

IESNA LM-79 & LM-80 Testing:
RAB LED luminaires have been tested by an independent laboratory in accordance with IESNAlm-79 andlm-80

DLC Listed:
This product is listed by Design Lights Consortium (DLC) as an ultra-efficient premium product that qualifies for the highest tier of rebates from DLC Member Utilities. Designed to meet DLC 5.1 requirements.
DLC Product Code: S-QOHE9L

Electrical

Driver:
35W: Class 2, Constant Current, 120-277V, 50/60 Hz, 120V: 0.30A, 208V: 0.17A, 240V: 0.15A, 277V: 0.13A

30W: Class 2, Constant Current, 120-277V, 50/60 Hz, 120V: 0.25A, 208V: 0.15A, 240V: 0.13A, 277V: 0.12A

25W: Class 2, Constant Current, 120-277V, 50/60 Hz, 120V: 0.21A, 208V: 0.12A, 240V: 0.10A, 277V: 0.10A

Dimming Driver:
Driver includes dimming control wiring for 0-10V dimming systems. Requires separate 0-10V DC dimming circuit. Dims down to 10%.

THD:
2.87% at 120V, 3.07% at 277V

Power Factor:
99.74% at 120V, 96.42% at 277V

Battery Backup:
Battery backup will operate the fixture for 90 minutes if power fails. Wired for 120.

Surge Protection:
2.5kV

Construction

Housing:
Steel sheet metal

Cold Weather Starting:
The minimum starting temperature is -20°C (-4°F)

Ambient Temperature:
Suitable for use in up to 40°C (104°F)

Reflector:
High-reflectance, powder-coated finish, optimized for uniform light distribution

Mounting:
Retrofits into the existing housing

Lens:
Polycarbonate lens

Finish:
Formulated for high durability and long-lasting color

Green Technology:
Mercury and UV free. RoHS-compliant components.

LED Characteristics

LEDs:
Long-life, high-efficacy, surface-mount LEDs

Color Stability:
LED color temperature is warrantied to shift no more than 200K in color temperature over a 5-year period

Color Uniformity:
RAB's range of Correlated Color Temperature follows the guidelines of the American National Standard for Specifications for the Chromaticity of Solid State Lighting (SSL) Products, ANSI C78.377-2017.

Performance

Lifespan:
100,000-Hour LED lifespan based on IES LM-80 results and TM-21 calculations

Copyright © 2024 RAB Lighting All Rights Reserved Note: Specifications are subject to change at any time without notice

Technical Specifications (continued)

Other

5 Yr Limited Warranty:
The RAB 5-year, limited warranty covers light output, driver performance and paint finish. RAB's warranty is subject to all terms and conditions found at rablighting.com/warranty.

Note:
All values are typical (tolerance +/- 10%)

Buy American Act Compliance:
RAB values USA manufacturing! Upon request, RAB may be able to manufacture this product to be compliant with the Buy American Act (BAA). Please contact customer service to request a quote for the product to be made BAA compliant.

Dimensions

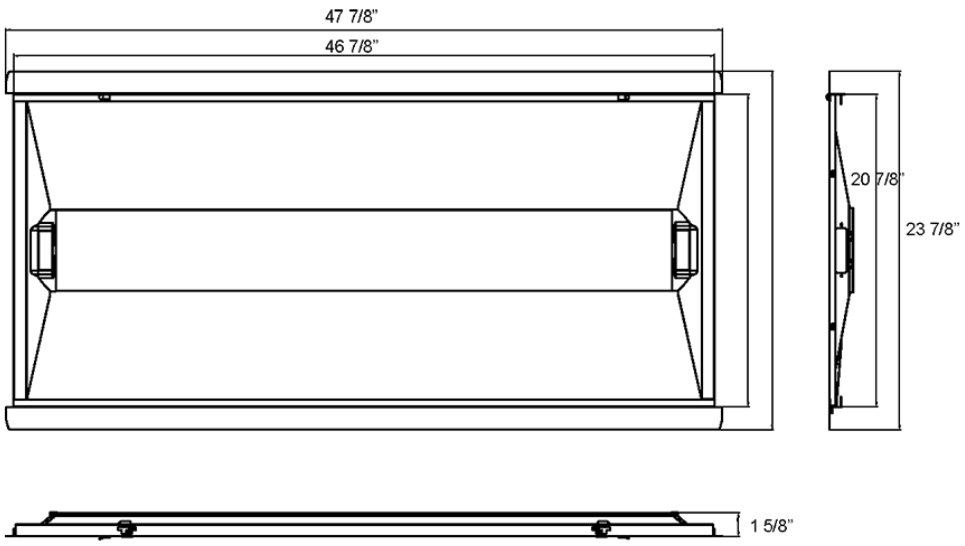

Copyright © 2024 RAB Lighting All Rights Reserved Note: Specifications are subject to change at any time without notice

Ordering Matrix

Family	Size (Wattages)	Color Temp	Finish	Voltage	Options
RTLED	2X4				
	2X2 = 2' x 2' (30/25/18W) **1X4 =** 1' x 4' (30/25/18W) **2X4 =** 2' x 4' (35/30/25W)	**Blank =** 3500K/4000K/5000K CCT Adjustable	**Blank =** White	**Blank =** 120-277V, 0-10V Dimming	**Blank =** No Option **/E =** Battery Backup **/MVS =** Microwave Occupancy Sensor **/LCB =** Lightcloud Blue Enabled **/LCBS =** Lightcloud Blue Enabled w/PIR Sensor **/LCBS/MVS =** Lightcloud Blue Enabled w/MVS Sensor **/MVS/E =** Microwave Occupancy Sensor w/Battery Backup **/LCB/E =** Lightcloud Blue Enabled w/Battery Backup **/LCBS/E =** Lightcloud Blue Enabled w/PIR Sensor & Battery Backup **/LCBS/MVS/E =** Lightcloud Blue Enabled w/MVS Sensor & Battery Backup

Copyright © 2024 RAB Lighting All Rights Reserved Note: Specifications are subject to change at any time without notice