SMW-S

Project:	Type:	Prepared By:	Date:



UPC: 019813834818

Features and Benefits

- Motion detection
- On-off functionality
- Slotted detection pattern
- Standby level options: off, 20% dim, 40% dim, or 60% dim
- Hold time options for motion detection: 30 seconds, 90 seconds, 5 minutes, 10 minutes
- Standard 3.5mm AUX port connection
- Do not use with enclosed metal luminaire
- IP20, don't expose directly to water

Technical Specifications

Performance

Product Type:
MW Sensor

L70 Lifespan:
50,000 Hours

Electrical

Input Voltage:
15VDC

Max Input Current:
0.1A

Max Output Current:
0.02A

Detection Angle:
120 degrees

Max Mounting Height:
33 ft

Detection Radius:
9.84 ft

Standby Dim Levels:
0/20%/40%/60%

Input Frequency:
5.8 GHz +/- 75MHz

Output Voltage:
10VDC

Operating Frequency:
5.8GHz

Operating Current:
20mA

Transmit Power:
1mW

Compliance

California Energy Commission (CEC) Status:
Lawful for Sales in California

Other

Warranty:
RAB warrants that our LED products will be free from defects in materials and workmanship for a period of five (5) years from the date of delivery to the end user, including coverage of light output, color stability, driver performance and fixture finish. RAB's warranty is subject to all terms and conditions found at rablighting.com/warranty.

Copyright © 2024 RAB Lighting All Rights Reserved Note: Specifications are subject to change at any time without notice

Case and Pallet Dimensions

	QTY	LENGTH (in)	WIDTH (in)	HEIGHT (in)
CASE	100	9.8	9.8	8
PALLET	10000	49.2	40	45.5

Wiring Diagram

Fig: 1 Brightness/Hold time

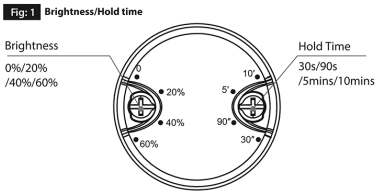

Fig: 2 Plug in the module

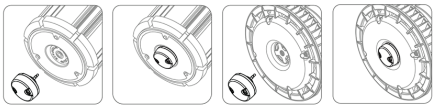

Dimension

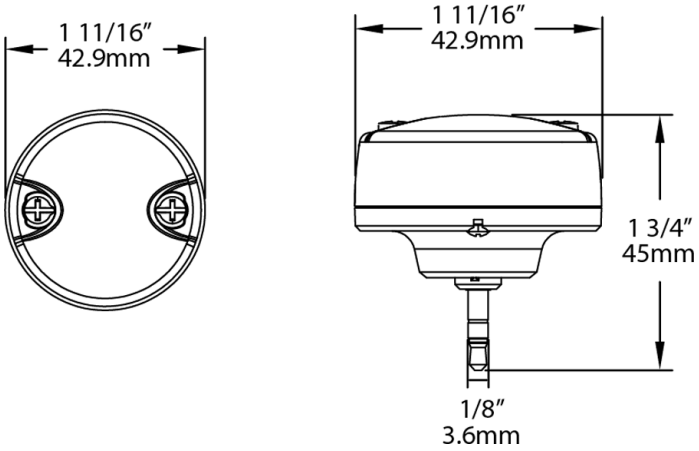

Copyright © 2024 RAB Lighting All Rights Reserved Note: Specifications are subject to change at any time without notice