SEAL2/PIR/E



Color: Gray

Weight: 4.0 lbs

Project:	**Type:**
Prepared By:	**Date:**

Driver Info

Type	Constant Current
120V	0.23A
208V	0.13A
240V	0.12A
277V	0.10A
Input Watts	25/20/15W

LED Info

Watts	25W
Color Temp	3500K/4000K/5000K
Color Accuracy	80 CRI
L70 Lifespan	100,000 Hours
Lumens	2040-3400 lm
Efficacy	130-142 lm/W

Technical Specifications

Compliance

UL Listed:
Suitable for wet locations

UL 94:
5VA flame classification

FCC:
Complies with Part 15B of the FCC Rules

NSF:
NSF Certified by Public Health and Safety

NEMA Rating:
4X, protected against corrosion

IESNA LM-79 & LM-80 Testing:
RAB LED luminaires and LED components have been tested by an independent laboratory in accordance with IESNA LM-79 and LM-80.

IP Rating:
Ingress protection rating of IP65 for dust and water

DLC Listed:
This product is listed by Design Lights Consortium (DLC) as an ultra-efficient premium product that qualifies for the highest tier of rebates from DLC Member Utilities. Designed to meet DLC 5.1 requirements.
DLC Product Code: S-2WR1TU

Electrical

Driver:
Constant Current, Class 2, 120-277V, 50/60Hz, 120V: 0.23A, 208V:0.13A, 240V: 0.12A, 277V 0.10A

Dimming Driver:
Driver includes dimming control wiring for 0-10V dimming systems. Requires separate 0-10V DC dimming circuit. Dims down to 10%.

THD:
3.55% at 120V, 4.59% at 277V

Power Factor:
99.9% at 120V, 97.74% at 277V

Surge Protection:
2.5kV

Battery Backup:
Battery backup will operate the fixture for 90 minutes if power fails. Wired for 120-277V.

Battery Backup Light Loss Factor:
0.232

LED Characteristics

LEDs:
Long-life, high-efficacy, surface-mount LEDs

Color Uniformity:
RAB's range of Correlated Color Temperature follows the guidelines of the American National Standard for Specifications for the Chromaticity of Solid State Lighting (SSL) Products, ANSI C78.377-2017.

Performance

Lifespan:
100,000-Hour LED lifespan based on IES LM-80 results and TM-21 calculations

Wattage Equivalency:
Equivalent to (2) F32T8 or (3) F17T8

Construction

IK Rating:
IK08 Protected against 5 joules of impact. Equivalent to the impact of a 3.75 lbs. (1.7kg) mass dropped from 11.8" (300mm) above the impacted surface.

Housing:
Impact-resistant polycarbonate* with stainless steel door clips. 1/2" NPS opening for conduit and bushing/cord entry. *Polycarbonate is affected by cleaning agents or other liquids containing partial solvents such as low molecular weight aldehydes and ethers, ketones, esters, aromatic hydrocarbons and perchlorinated hydrocarbons. Click here for a detailed list of damaging chemicals.

Copyright © 2024 RAB Lighting All Rights Reserved Note: Specifications are subject to change at any time without notice

Technical Specifications (continued)

Mounting:
Quick-mount, stainless steel snap on brackets supplied for surface mounting. V-Hook brackets supplied standard for suspending the fixture.

Lens:
Diffuse polycarbonate lens for low glare and maximum protection

Reflector:
Cold-rolled steel

Gaskets:
High-temperature silicone gaskets

Cold Weather Starting:
The minimum starting temperature is -40°C (-40°F)

Maximum Ambient Temperature:
Suitable for use in up to 40°C (104°F)

Installation:
Tether Cables are provided for easy installation. Quick connector may be used for quick and easy wiring.

Green Technology:
Mercury and UV free. RoHS-compliant components.

Finish:
Formulated for high durability and long-lasting color

Sensor Specifications

Maxmium Mounting Height:
19.68ft. (6m)

Operating Voltage:
DC Input: 10.5-15V >50mA

Dimming Control:
ON/OFF 0-10V Dimmable

Operating Temperature:
-20°C to 70°C (-4°F to 158°F)

IP Rating:
Ingress protection rating of IP65 for dust and water

Brightness:
Factory Setting: 100%

Sensitivity Setting:
25%/50%/75%/100%
(Factory Setting: 50%)

Standby Period:
0s/10s/30s/1min/5min/10min/30min/60min/+∞
(Factory Setting: 1min)

Daylight:
2Lux/10Lux/30Lux/50lLux/80Lux/120Lux/Disabled
(Factory Setting: disabled)

Hold Time:
5s/30s/1min/3min/5min/10min/20min/30min
(Factory Setting: 20min)

Standby Dimming:
10%20%/30%/50%
(Factory Setting: 20%)

Detection Angle:
<120&deg Fresnel lens

Detection Distance:
Radius 9.84-19.68ft. (3-6m)

Remote Control Accessory:
Adjust settings using remote control (catalog# MSR1). Only available with 0-10V dimming driver options. Remote control available here.

Other

5 Yr Limited Warranty:
The RAB 5-year, limited warranty covers light output, driver performance and paint finish. RAB's warranty is subject to all terms and conditions found at rablighting.com/warranty.

Buy American Act Compliance:
RAB values USA manufacturing! Upon request, RAB may be able to manufacture this product to be compliant with the Buy American Act (BAA). Please contact customer service to request a quote for the product to be made BAA compliant.

Copyright © 2024 RAB Lighting All Rights Reserved Note: Specifications are subject to change at any time without notice

SEAL2/PIR/E

Dimensions

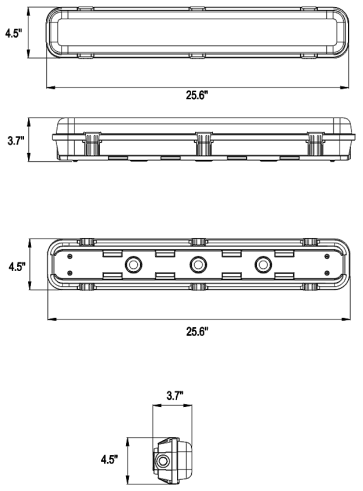

Features

- 100,000-Hour LED lifespan
- DLC Premium Listed
- 0-10V dimming, standard
- 5-Year, limited warranty

Ordering Matrix

Family	Length/Wattage	Color Temp	Finish	Voltage	Options
SEAL	2				/PIR/E
	2 = 2 ft 25/20/15W **4 =** 4 ft 50/40/30W **8 =** 8 ft 100/80/60W	**Blank =** 3500K/4000K/5000K CCT Adjustable	**Blank =** Gray	**Blank =** 0-10V Dimming, 120-277V	**Blank =** No Option **/PIR =** Passive Infrared Sensor **/MVS =** Microwave Occupancy Sensor **/E =** Battery Backup **/LCBS =** Lightcloud Blue Enabled w/PIR Sensor **/LCBS/MVS =** Lightcloud Blue Enabled w/MVS Sensor **/MVS/E =** Microwave Occupancy Sensor w/Battery Backup **/PIR/E =** Passive Infrared Sensor w/Battery Backup **/LCBS/E =** Lightcloud Blue Sensor w/Battery Backup **/LCBS/MVS/E =** Lightcloud Blue Microwave Occupancy Sensor w/Battery Backup

Copyright © 2024 RAB Lighting All Rights Reserved Note: Specifications are subject to change at any time without notice