# SML3

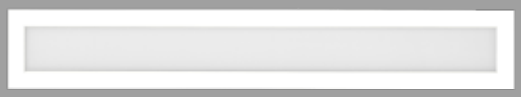

Contemporary surface-mount fixtures with a slim design. Multiple sizes and form factors available, in both 80 and 90 CRI models. 120V and 120-277V offered.

Color: White

Weight: 3.4 lbs

| | |
|---|---|
| **Project:** | **Type:** |
| **Prepared By:** | **Date:** |

## Driver Info

| | |
|---|---|
| Type | Constant Current |
| 120V | 0.33A |
| 208V | 0.21A |
| 240V | 0.18A |
| 277V | 0.16A |
| Input Watts | 35W |

## LED Info

| | |
|---|---|
| Watts | 35W |
| Color Temp | Field Adjustable 2700K/3000K/3500K/4000K/5000K |
| Color Accuracy | 90 CRI |
| L70 Lifespan | 50,000 Hours |
| Lumens | 2,600-2,830 lm |
| Efficacy | 74-81 lm/W |

## Technical Specifications

### Performance

**Description:**
This surface linear downlight offers a sleek, modern look for any application. Offered in various unique form factors, 5 color temperatures to choose from, universal voltage (120-277V) and dimming options available.

**Product Type:**
Surface & Flush Mounts

**Input Wattage:**
35W

**Efficacy:**
5000K: 81lm/W
4000K: 81lm/W
3500K: 79lm/W
3000K: 76lm/W
2700K: 74lm/W

**L70 Lifespan:**
50,000-Hour LED lifespan based on IES LM-70 results

**Dimming:**
Yes, See Dimmer Compatibility List

**Wattage Equivalency:**
Equivalent to 70W CFL

### Compliance

**UL Listed:**
Suitable for damp locations

**Energy Star Approved:**
ENERGY STAR® Version 2.2 Certified

**Energy Star ID:**
2396880

**Trade Agreements Act Compliant:**
This product is a product of Cambodia and a "designated country" end product that complies with the Trade Agreements Act

### Electrical

**THD:**
≤30%

**Power Factor:**
≥0.9

**Operating Frequency:**
50/60Hz

### Construction

**Material:**
Metal

**Trim Style:**
Smooth Trim

**Mounting:**
Surface mount

**Operating Temperature Range:**
-20°C - 40°C (-4°F - 104°F)

### Other

**Warranty:**
RAB warrants that our LED products will be free from defects in materials and workmanship for a period of five (5) years from the date of delivery to the end user, including coverage of light output, color stability, driver performance and fixture finish. RAB's warranty is subject to all terms and conditions found at rablighting.com/warranty.

**Buy American Act Compliance:**
RAB values USA manufacturing! Upon request, RAB may be able to manufacture this product to be compliant with the Buy American Act (BAA). Please contact customer service to request a quote for the product to be made BAA compliant.


Copyright © 2024 RAB Lighting All Rights Reserved Note: Specifications are subject to change at any time without notice

## Dimensions

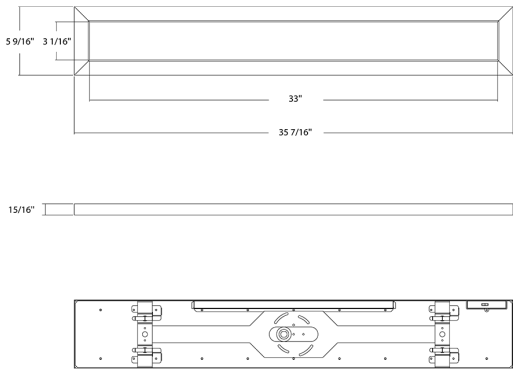


## Features

- Select from 5 field-adjustable color temperatures 2700K, 3000K, 3500K, 4000K, or 5000K
- Suitable for indoor applications in dry and damp environments
- Dimmable, see Dimmer Compatibility List
- Meets California Title 24 requirements
- 50,000 life hours
- 5-Year, no compromise warranty

## Ordering Matrix

| Family | Size | CRI/Color Temp | Finish | Voltage/Dimming |
|---|---|---|---|---|
| SML | 3 | | | |
| | **2 =** 2 ft, 25W<br>**3 =** 3 ft, 35W<br>**4 =** 4 ft, 45W | **Blank =** 90 CRI, CCT Adjustable | **Blank =** White | **Blank =** 120-277V, TRIAC |


Copyright © 2024 RAB Lighting All Rights Reserved Note: Specifications are subject to change at any time without notice