SR2/MVS

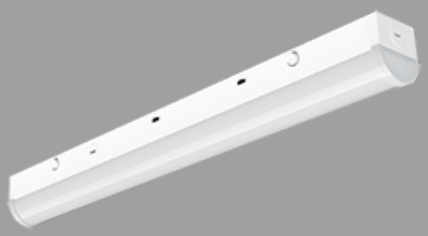

Color: White

Weight: 2.5 lbs

Project:	**Type:**
Prepared By:	**Date:**

Driver Info

Type	Constant Current
120V	0.16A/0.12A/0.08A
208V	0.09A/0.07A/0.05A
240V	0.08A/0.06A/0.04A
277V	0.07A/0.05A/0.04A
Input Watts	10-20.6W

LED Info

Watts	19/14/10W
Color Temp	3500K/4000K/5000K
Color Accuracy	83-85 CRI
L70 Lifespan	50,000 Hours
Lumens	1,552-2,998 lm
Efficacy	140.6-160.6 lm/W

Technical Specifications

Field Adjustability

Field Adjustable:
Field Adjustable Light Output:
19W/14W/10W (factory default 19W)
Color temperature selectable by 5000K, 4000K and 3500K (factory default 4000K)

Compliance

UL Listed:
Suitable for damp locations

IESNA LM-79 & LM-80 Testing:
RAB LED luminaires and LED components have been tested by an independent laboratory in accordance with IESNA LM-79 and LM-80.

DLC Listed:
This product is on the Design Lights Consortium (DLC) Qualified Products List and is eligible for rebates from DLC Member Utilities. Designed to meet DLC 5.1 requirements.
DLC Product Code: S-BY8SM3 (Direct Linear Ambient Luminaires)
DLC Product Code: S-DX6VKR (Stairwell and Passageway Luminaires)

LED Characteristics

LEDs:
Long-life, high-efficacy, discrete, surface-mount LEDs

Color Uniformity:
RAB's range of Correlated Color Temperature follows the guidelines of the American National Standard for Specifications for the Chromaticity of Solid State Lighting (SSL) Products, ANSI C78.377-2017.

Color Consistency:
4-step MacAdam Ellipse binning to achieve consistent fixture-to-fixture color

Construction

Ambient Temperature :
Max Power Temp Rating: 50°C (122°F)
Middle Power Temp Rating: 55°C (132°F)
Low Power Temp Rating: 62°C (144°F)

Cold Weather Starting:
The minimum starting temperature is -20°C (-4°F)

Lens:
Polycarbonate lens

Housing:
Sheet metal

Mounting:
Surface mounting standard. V-Hooks and Chain mounting available (ordered separately, SR VHOOK KIT).

Green Technology:
Mercury and UV free. RoHS-compliant components.

Finish:
Formulated for high durability and long-lasting color

Performance

Lifespan:
50,000-Hour LED lifespan based on IES LM-80 results and TM-21 calculations

Wattage Equivalency:
19W: (1) F32T8
14W: (1) F32T8
10W: (1) F32T8

Electrical

Dimming Driver:
Driver includes dimming control wiring for 0-10V dimming systems. Requires separate 0-10V DC dimming circuit. Dims down to 10%.

THD:
6.33% at 120V, 12.02% at 277V

Power Factor:
99.8% at 120V, 98.22% at 277V

Surge Protection:
L-N 1KV, L/N-G 2KV

Copyright © 2024 RAB Lighting All Rights Reserved Note: Specifications are subject to change at any time without notice

Technical Specifications (continued)

Sensor Specifications

Remote Control Accessory:
Adjust settings using remote control (catalog# MSR1). Only available with 0-10V dimming driver options. Remote control available here.

Operating Voltage:
DC Input: 10.5-15V
Current>50mA

Operating Temperature:
Ta: -31° F (-35° C)* ~ +122° F(+50° C)

Sensor Warranty:
5-year sensor warranty

Sensitivity Setting:
25%/50%/75%/100%

Standby Period:
0s/10s/30s/1min/5min/10min/30min/60min/+∞

Daylight:
2Lux/10Lux/30Lux/50Lux/80Lux/120Lux/Disable

Hold Time:
5s/30s/1min/3min/5min/10min/20min/30min

Standby Dimming:
10%/20%/30%/50%

Detection Angle:
30° to 150° without glass cover

Detection Distance:
Radius 9.84-22.96ft(3-7m)

Mounting Height:
Max 49ft.(15m)

Other

5 Yr Limited Warranty:
The RAB 5-year, limited warranty covers light output, driver performance and paint finish. RAB's warranty is subject to all terms and conditions found at rablighting.com/warranty.

Accessories:
Suspended Mounting Kit: SR VHOOK KIT
Surface Mount Kit: SR JOIN KIT

Note:
All values are typical (tolerance +/- 10%)

Buy American Act Compliance:
RAB values USA manufacturing! Upon request, RAB may be able to manufacture this product to be compliant with the Buy American Act (BAA). Please contact customer service to request a quote for the product to be made BAA compliant.

Copyright © 2024 RAB Lighting All Rights Reserved Note: Specifications are subject to change at any time without notice

Dimensions

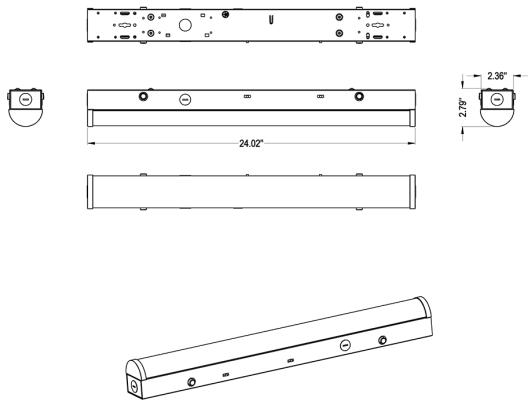

Features

- 50,000-Hour LED lifespan
- 120-277V standard
- 0-10V dimming, standard
- 5-Year, limited warranty

Ordering Matrix

Family	Size/Wattage	Color Temp	Mounting	Finish	Options
SR	2				/MVS
	4L = 4ft (28/21/14W) **4 =** 4ft (40/30/20W) **8 =** 8ft (60/50/40W) **8H =** 8ft (85/75/54W) **2 =** 2ft (19/14/10W)	**Blank =** 3500K/4000K/5000K CCT Adjustable	**Blank =** J-Box Adaptor	**Blank =** White	**/LCBS/MVS/E =** Lightcloud Blue MVS Sensor w/Battery Back Up **/LCBS/E =** Lightcloud Blue PIR Sensor w/Battery Back Up **/PIR/E =** Passive Infrared Occupancy Sensor w/Battery Back Up **/MVS/E =** Microwave Occupancy Sensor w/Battery Back Up **/LCBS/MVS =** Lightcloud Blue Enabled w/MVS Sensor **/LCBS =** Lightcloud Blue Enabled w/PIR Sensor **/PIR =** Passive Infrared Occupancy Sensor **/MVS =** Microwave Occupancy Sensor **/E =** Battery Back Up **Blank =** No Option

Copyright © 2024 RAB Lighting All Rights Reserved Note: Specifications are subject to change at any time without notice