MW-S

Project:	Type:	Prepared By:	Date:



UPC: 019813833064

Features and Benefits

Motion detection

360° detection through walls and objects

Continuous detection pattern

On-off functionality

Standby level options: off, 20% dim, 40% dim, or 60% dim

Hold time options for motion detection: 30 seconds, 90 seconds, 5 minutes, or 10 minutes

If no motion is detected: lamp will be switched to 0-60% brightness

If any motion is detected: lamp returns to 100% output to pre-defined hold time

Daylight Photocell built in with default threshold of 300 lx

Technical Specifications

Performance

Product Type:
MW Sensor

Electrical

Operating Temperature:
-20°C to 60°C

Input Voltage:
15VDC

Max Input Current:
0.1A

Max Output Current:
0.02A

Detection Angle:
120 degrees

Max Mounting Height:
33 ft

Detection Radius:
9.84 ft

Standby Dim Levels:
0/20%/40%/60%

Input Frequency:
5.8 GHz +/- 75MHz

Input Current @ 120V:
Max 0.1mA @15V

Output Voltage:
10VDC

Operating Frequency:
5.8GHz

Operating Current:
20mA

Transmit Power:
1mW

Construction

For Use Outdoors in Open Fixtures:
No

Compliance

UL Listed:
Yes

California Energy Commission (CEC) Status:
Lawful for Sales in California

Other

Warranty:
RAB warrants that our LED products will be free from defects in materials and workmanship for a period of five (5) years from the date of delivery to the end user, including coverage of light output, color stability, driver performance and fixture finish. RAB's warranty is subject to all terms and conditions found at rablighting.com/warranty.

Copyright © 2024 RAB Lighting All Rights Reserved Note: Specifications are subject to change at any time without notice

Case and Pallet Dimensions

	QTY	LENGTH (in)	WIDTH (in)	HEIGHT (in)
CASE	100	9.8	9.8	9
PALLET	8000	42.5	39.4	39.4

Dimension

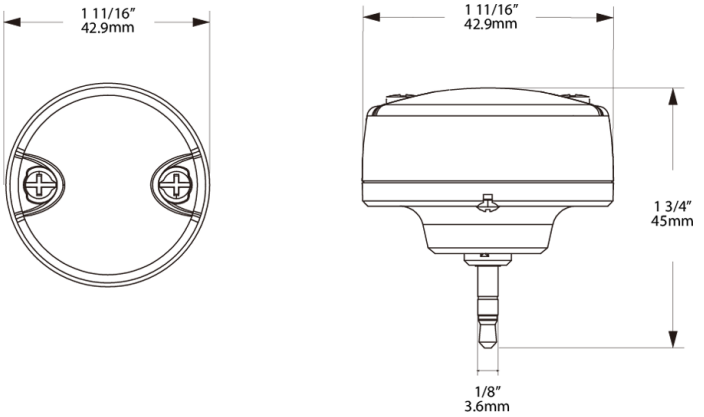

Copyright © 2024 RAB Lighting All Rights Reserved Note: Specifications are subject to change at any time without notice