JBKNOOK INSTALLATION INSTRUCTIONS

KNOOK® FA UNDERCABINET

RAB Lighting is committed to creating high-quality, affordable, well-designed and energy-efficient LED lighting and controls that make it easy for electricians to install and end users to save energy. We'd love to hear your comments. Please call the Marketing Department at 888-RAB-1000 or email: marketing@rablighting.com

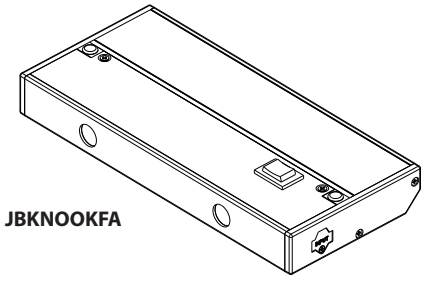

JBKNOOKFA

IMPORTANT

READ CAREFULLY BEFORE INSTALLING FIXTURE. RETAIN THESE INSTRUCTIONS FOR FUTURE REFERENCE.

RAB fixtures must be wired in accordance with the National Electrical Code and all applicable local codes. Proper grounding is required for safety. THIS PRODUCT MUST BE INSTALLED IN ACCORDANCE WITH THE APPLICABLE INSTALLATION CODE BY A PERSON FAMILIAR WITH THE CONSTRUCTION AND OPERATION OF THE PRODUCT AND THE HAZARDS INVOLVED.

WARNING: Make certain power is OFF before installing or maintaining fixture. No user serviceable parts inside.

SAFETY INSTRUCTIONS

WARNING: Make certain power is OFF before installing or maintaining fixture. No user serviceable parts inside.

WARNING: Risk of fire or electric shock. Suitable For Indoor Dry Locations Only.

WARNING: To prevent overheating do not install in small enclosed spaces.

WARNING: Do not install this product in an environment outside the listed ambient temperature*(-20°C to +40°C)*.

WARNING: 255W maximum linear run, do not use this Junction Box to provide power to other products.

MOUNTING INSTRUCTIONS

The fixture is suitable for indoor dry locations only.

1. Remove **Junction Box Cover Screws** *(2)* and remove Cover. Save Screws.
2. Prepare electrical wire*(s) (supplied by stripping conductor ends approximately 3/8").*
3. For installation using **3/8" Wire Connector** *(supplied)* determine mounting orientation and remove one **KNOCKOUT** on desired side of **Junction Box** for electrical supply and attach **3/8" Wire Connector** to **Junction Box** as shown. Outer wire jacket must protrude through **3/8" Wire Connector** to adequately protect internal conductors.
4. Secure **3/8" Wire Connector** to **Junction Box** by tightening the **Locknut** then tightening **Clamping Screws***(2)* on electrical connector fitting securely.

MOUNTING INSTRUCTIONS *(CONT)*

5. Push stripped wire*(s)* ends into PUSH-IN WIRE CONNECTORS *(see WIRING DIAGRAM)*. Push excess electrical supply wire*(s)* back into wall.
6. Secure **Junction Box** to mounting surface using *(2)* **Captive Screws** ***(supplied)***, be careful not to drive screws all the way through the cabinet bottom. Use shorter screws if neccessary *(supplied by others)*.
7. Replace and secure **Junction Box Cover** with supplied screws.
8. Follow installation instructions provided with undercabinet light fixture for mounting and connector options.
9. Before powering on make sure that all fixtures connected to **Junction Box** have been properly installed and that all open **Electrical Ports** on the **Junction Box** and fixtures are safely covered with **Electrical Port** Covers.

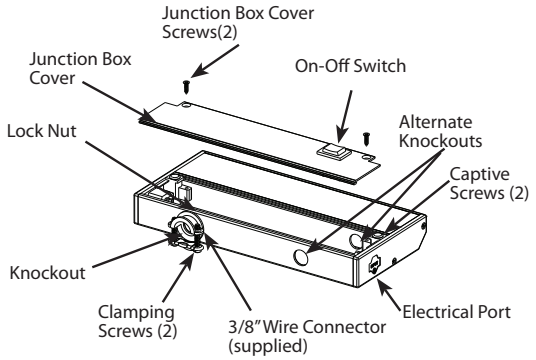

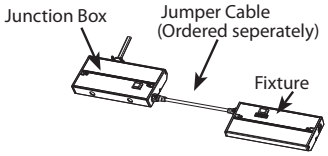

JBKNOOK INSTALLATION INSTRUCTIONS
KNOOK® FA UNDERCABINET

RAB Lighting is committed to creating high-quality, affordable, well-designed and energy-efficient LED lighting and controls that make it easy for electricians to install and end users to save energy. We'd love to hear your comments. Please call the Marketing Department at 888-RAB-1000 or email: marketing@rablighting.com

ON-OFF WIRING

Make sure the supply voltage is the same as the luminaire voltage, see fixture spec label.

1. Connect the black fixture lead to the LINE supply lead.
2. Connect the white fixture lead to the COMMON supply lead.
3. Connect the GROUND wire from fixture to supply ground.

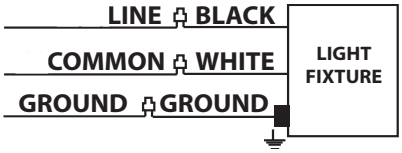

CLEANING & MAINTENANCE

CAUTION: Be sure fixture temperature is cool enough to touch. Do not clean or maintain while fixture is energized.

1. Clean polycarbonate lens with non-abrasive glass cleaning solution.
2. Do not open fixture to clean the LED. Do not touch the LED.

TROUBLESHOOTING

1. Check that the line voltage at fixture is correct. Refer to wiring directions.
2. Is the fixture grounded properly?

DIMENSIONAL DRAWINGS

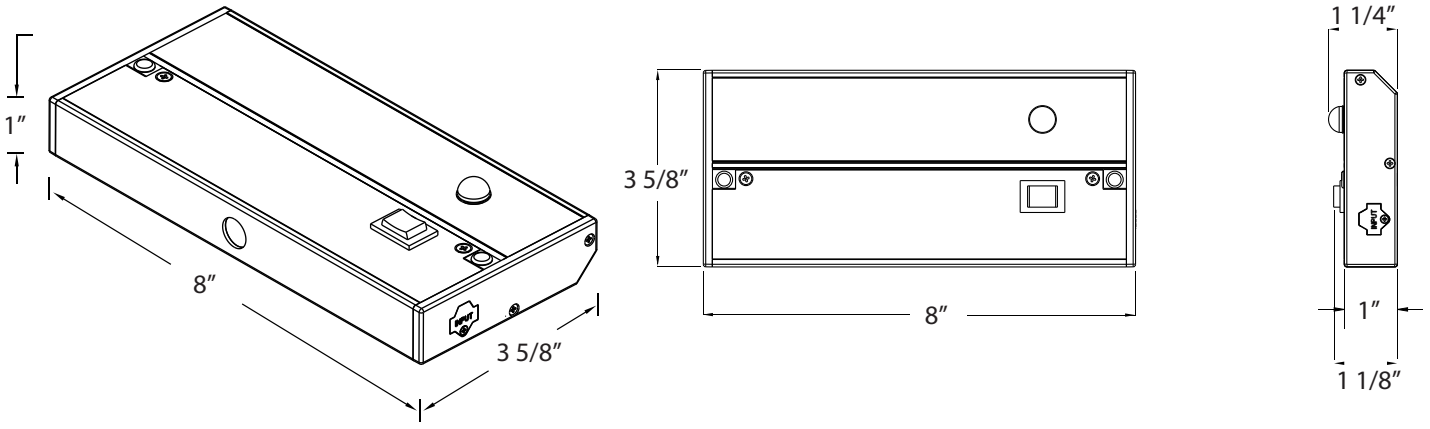

Note: These instructions do not cover all details or variations in equipment nor do they provide for every possible situation during installation operation or maintenance.

© 2020 RAB LIGHTING Inc.
Northvale, New Jersey 07647 USA

Easy Answers

rablighting.com
Visit our website for product info

Tech Help Line
Call our experts: 888 722-1000

e-mail
Answered promptly - sales@rablighting.com

Free Lighting Layouts
Answered online or by request

JBKNOOKFA IN-0420
73692-RAB