INSTALLATION INSTRUCTIONS
FIELD-ADJUSTABLE KNOOK® UNDERCABINET LIGHT

RAB Lighting is committed to creating high-quality, affordable, well-designed and energy-efficient LED lighting and controls that make it easy for electricians to install and end users to save energy. We'd love to hear your comments. Please call the Marketing Department at 888-RAB-1000 or email: marketing@rablighting.com



KNOOK FA 8"



KNOOK FA 16"



KNOOK FA 24"



KNOOK FA 32"

IMPORTANT

READ CAREFULLY BEFORE INSTALLING FIXTURE. RETAIN THESE INSTRUCTIONS FOR FUTURE REFERENCE.
RAB fixtures must be wired in accordance with the National Electrical Code and all applicable local codes. Proper grounding is required for safety. THIS PRODUCT MUST BE INSTALLED IN ACCORDANCE WITH THE APPLICABLE INSTALLATION CODE BY A PERSON FAMILIAR WITH THE CONSTRUCTION AND OPERATION OF THE PRODUCT AND THE HAZARDS INVOLVED.
WARNING: Make certain power is OFF before installing or maintaining fixture. No user serviceable parts inside.
Suitable for 120V only, 60Hz.

SAFETY INSTRUCTIONS

WARNING: Risk of fire or electric shock. Suitable For Indoor Dry Locations Only.
WARNING: To prevent overheating do not install in small enclosed spaces.
WARNING: Do not install this product in an environment outside the listed ambient temperature *(-20° to +40°C)*.
WARNING: Do not exceed the maximum number of interconnected units per Fig. 7.

MOUNTING INSTRUCTIONS

The fixture is suitable for indoor dry locations only.

1. Determine location to install fixture*(s)*.
   WARNING: To prevent wiring damage or abrasion, do not expose wiring to edges of sharp objects.
2. Access wiring compartments using option A or B:
   A) Remove **Knockout**. Loosen **Rear Access Plate Screw** and remove door.
   B) **Alternate Knockouts** for 24" or 32" only *(Fig. 2 and 3)*. **Alternate Knockouts** are located along back and top of **Housing**. Remove **Wiring Compartment Cover**.
3. To access internal wiring remove **Wiring Compartment Cover** *(Fig. 3)*. Feed wires through **3/8" Wire Connector** *(provided)* and install connector to **Rear Access Plate**. Wire cable to **Push-in Connectors**. Secure **Rear Access Plate** to fixture *(Fig. 4)*.
4. Secure fixture to mounting surface using *(2)* flat head wood screws *(provided)*, be careful not to drive screws all the way through the cabinet bottom. Use shorter screws if necessary *(supplied by others)*. Once the fixture is secure to surface, insert **Screw Hole Covers** *(provided)*.

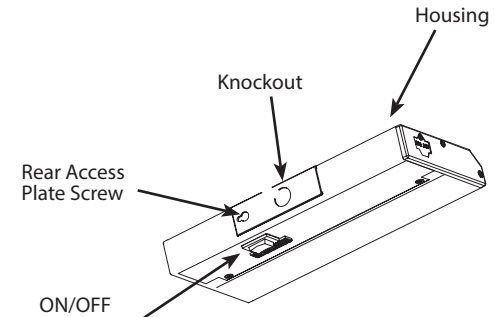

Fig: 1

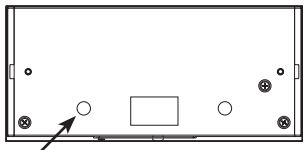

Fig: 2

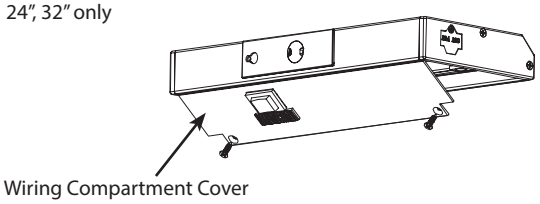

Fig: 3

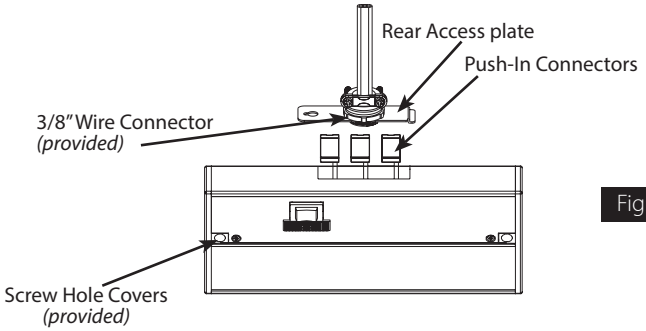

Fig: 4

INSTALLATION INSTRUCTIONS
FIELD-ADJUSTABLE KNOOK® UNDERCABINET LIGHT

RAB Lighting is committed to creating high-quality, affordable, well-designed and energy-efficient LED lighting and controls that make it easy for electricians to install and end users to save energy. We'd love to hear your comments. Please call the Marketing Department at 888-RAB-1000 or email: marketing@rablighting.com

FIELD ADJUSTMENT

Follow instructions below to change the fixture **Color Temperature** *(CCT)* from the factory settings.

Power *(%)* Selection:
This product is equipped with 50% and 100% power output selection.

Color Temperature *(CCT)* Selection:
This product is equipped with 5000K, 4000K, 3500K, 3000K, 2700K CCT color temperature selection. Factory Settings: 3000K.

1. Locate the Selector Switches on the surface of the fixture as shown in Fig. 5.
2. Select desired **Color Temperature** *(CCT)* and **On/Off Power Switch** by sliding the respective switch to the deisred value.

Fig: 5

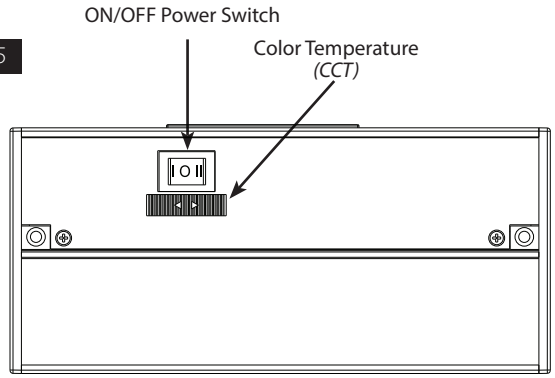

ON - OFF WIRING

Diming compatible with most incandescent dimmers. See wiring diagram below *(Fig. 6)*. Fixture suitable for 120V, 60Hz only.

1. Connect the black fixture lead to the **LINE** supply lead.
2. Connect the white fixture lead to the **COMMON** supply lead.
3. Connect the **GROUND** wire from fixture to supply ground.

Fig: 6

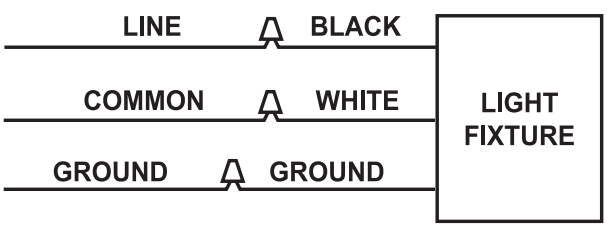

INTERCONNECTING FIXTURE TABLE

See table below for maximum number of fixtures that can be connected together.

Fig: 7

Catalog #	Maximum # of Interconnect Units
KNOOKFA8	Maximum **70** Units
KNOOKFA16	Maximum **30** Units
KNOOKFA24	Maximum 20 Units
KNOOKFA32	Maximum 15 Units

COMPATIBLE DIMMERS

This partial list contains a representative selection of known compatible dimming controls.

- Diva DV-603P
- RRD-8ANS-WH
- RRD-6NA-WH
- RRD-6D-WH
- P&S D703P
- Skylark CTCL-153P
- Skylark S-600P
- Skylark SELV-300P
- DVELV-300PH-WH
- SPSELV-400M
- TGCL-153P
- LECL-153P
- SSCL-153P
- S-600
- MAELV-600-WH
- PD-6WCL-WH
- CDecora IPL06-10Z
- Decora 6631-P
- Decora 6674-P
- 35A00-1
- 6627-L
- 6674-L
- TAL06P-C1
- DAL06P-C1
- SAL06P-W
- AAL06-C1

CLEANING & MAINTENANCE

CAUTION: Be sure fixture temperature is cool enough to touch. Do not clean or maintain while fixture is energized.

1. Clean polycarbonate lens with non-abrasive glass cleaning solution.
2. Do not open fixture to clean the LED. Do not touch the LED.

TROUBLESHOOTING

1. Check that the line voltage at fixture is correct. Refer to wiring directions.
2. Is the fixture grounded properly?

INSTALLATION INSTRUCTIONS
FIELD-ADJUSTABLE KNOOK® UNDERCABINET LIGHT

RAB Lighting is committed to creating high-quality, affordable, well-designed and energy-efficient LED lighting and controls that make it easy for electricians to install and end users to save energy. We'd love to hear your comments. Please call the Marketing Department at 888-RAB-1000 or email: marketing@rablighting.com

INTERCONNECTING FIXTURES

Use **In-Line Connector** supplied with each fixture to connect fixtures directly to each other end-to end.

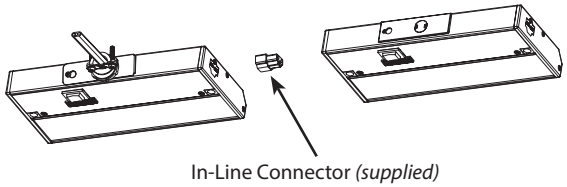

ACCESSORIES - KJC6, KJC12, KJC24, KJC72

Use 6", 12", 24", 72" flexible **Jumper Cables** *(ordered separately)* to interconnect nearby fixture.

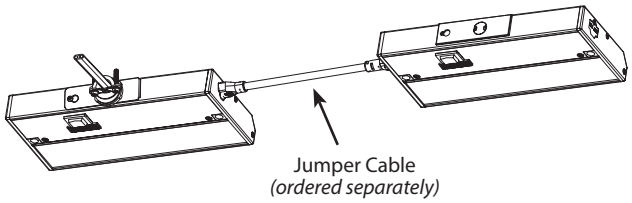

ACCESSORIES - KCP

Use 6FT flexible **Cord and Plug** *(ordered separately)* to power fixture.

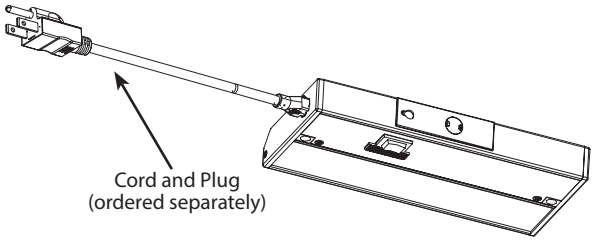

ACCESSORIES - KPCJ

Use 6FT flexible **Power Feed Cord** *(ordered separately)* to connect fixture to **Junction Box** *(supplied by others)*.

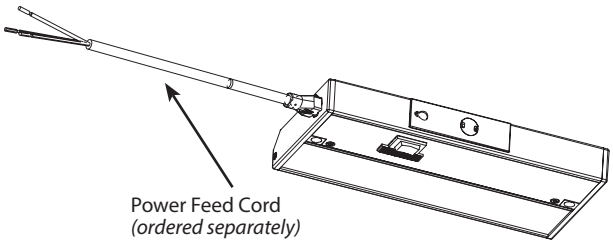

ACCESSORIES - JBKNOOK

Use **Junction Box** *(ordered separately)* to split electrical connections between two fixtures.

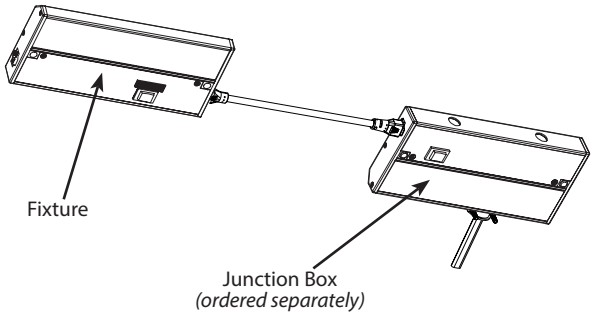

ACCESSORIES - OCSKNOOK

Use **Junction Box** with **Motion Sensor** *(ordered separately)* for automatic ON/OFF control.

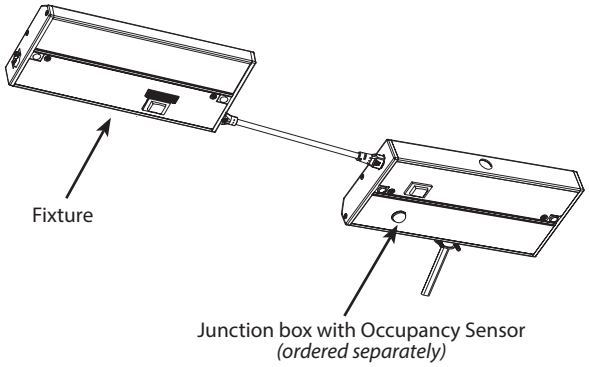

Note: These instructions do not cover all details or variations in equipment nor do they provide for every possible situation during installation operation or maintenance.

© 2023 RAB LIGHTING Inc.

Easy Answers

rablighting.com
Visit our website for product info

Tech Help Line
Call our experts: 888 722-1000

e-mail
Answered promptly - sales@rablighting.com

Free Lighting Layouts
Answered online or by request

KNOOKFA 0123
73691-RAB