OCSKNOOKFA INSTALLATION INSTRUCTIONS

KNOOK® FA UNDERCABINET

RAB Lighting is committed to creating high-quality, affordable, well-designed and energy-efficient LED lighting and controls that make it easy for electricians to install and end users to save energy. We'd love to hear your comments. Please call the Marketing Department at 888-RAB-1000 or email: marketing@rablighting.com

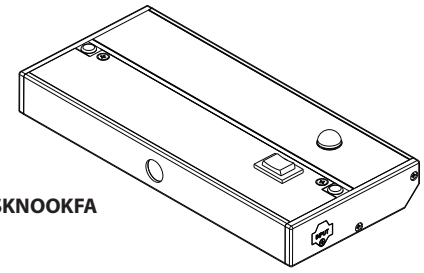

OCSKNOOKFA

IMPORTANT

READ CAREFULLY BEFORE INSTALLING FIXTURE. RETAIN THESE INSTRUCTIONS FOR FUTURE REFERENCE.
RAB fixtures must be wired in accordance with the National Electrical Code and all applicable local codes. Proper grounding is required for safety. THIS PRODUCT MUST BE INSTALLED IN ACCORDANCE WITH THE APPLICABLE INSTALLATION CODE BY A PERSON FAMILIAR WITH THE CONSTRUCTION AND OPERATION OF THE PRODUCT AND THE HAZARDS INVOLVED.
WARNING: Make certain power is OFF before installing or maintaining fixture. No user serviceable parts inside.

SAFETY INSTRUCTIONS

WARNING: Make certain power is OFF before installing or maintaining fixture. No user serviceable parts inside.

WARNING: Risk of fire or electric shock. Suitable For Indoor Dry Locations Only.

WARNING: To prevent overheating do not install in small enclosed spaces.

WARNING: Do not install this product in an environment outside the listed ambient temperature*(-20°C to +40°C)*.

WARNING: 255W maximum linear run, do not use this Junction Box to provide power to other products.

OCCUPANCY SENSOR

SPECIFICATIONS
Input Voltage: 120V
Operational Frequency: 50/60Hz

Time Delay: 30 seconds, 10 min, 20 min, 30 min
Operating Temperature: 0°C to 55°C *(32°F to 131°F)*
Mounting Height: reduced sensitivity, 8ft
optimal sensitivity, 6ft
Coverage Diameter: 10ft at 8ft mounting height ***(Fig. 1)***

OPERATION

- Uses passive infrared technology to detect motion.
- Heat from occupants of room triggers sensor into Auto-on.
- Lack of detection triggers Time Delay
  - If Time Delay period elapses with no detected motion,
  - fixture will turn off.
  - Motion detection during Time Delay period stops
  - Time Delay and fixture remains on.
- Movement must occur across zones of detection
  *(see **Coverage Diagram (Fig. 1)***

Fig: 1

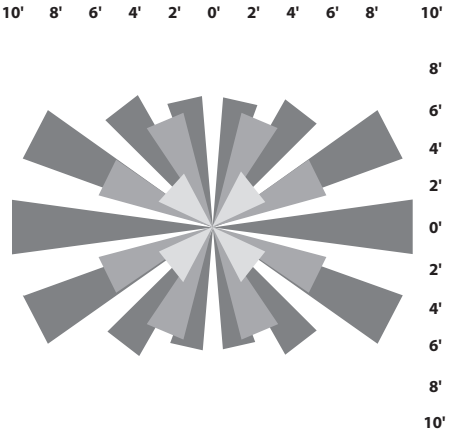

OCSKNOOKFA INSTALLATION INSTRUCTIONS

KNOOK® FA UNDERCABINET

RAB Lighting is committed to creating high-quality, affordable, well-designed and energy-efficient LED lighting and controls that make it easy for electricians to install and end users to save energy. We'd love to hear your comments. Please call the Marketing Department at 888-RAB-1000 or email: marketing@rablighting.com

SETTING TIME DELAY

- Turn dial to desired **Time Delay** period *(see Fig. 2)*
- **Time Delay Setting Dial** is located on sensor surface *(see Fig. 3)*

Fig: 2

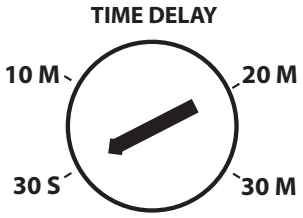

SAFETY INSTRUCTIONS

The fixture is suitable for indoor dry locations only.

1. Loosen **Screws** *(2)* to remove the **Junction Box Cover Plate** as shown in **Fig. 3.**
2. Loosen **Screws** *(3)* to remove **Side Plate** as shown in **Fig. 3**.
3. Remove the **Sensor Cover** and adjust the **Time Delay Setting Dial** as shown in **Fig 4**.
4. Reinstall the **Sensor Cover** and **Side Plate** and secure with **Screws**.
5. Prepare electrical wire*(s) (supplied by others)* by stripping conductor ends approximately 3/8".
6. For installation using **3/8" Wire Connector** *(supplied)* determine mounting orientation and remove one **KNOCKOUT** on desired side of **Junction Box** for electrical supply and attach **3/8" Wire Connector** to **Junction Box** as shown. Outer wire jacket must protude through **3/8" Wire Connector** to adequately protect internal conductors.
7. Secure **3/8" Wire Connector** to **Junction Box** by tightening the **Locknut** then tightening **Clamping Screws***(2)* on electrical connector fitting securely.
8. Push stripped wire*(s)* ends into PUSH-IN WIRE CONNECTORS *(see WIRING DIAGRAM)*. Push excess electrical supply wire*(s)* back into wall.
9. Secure **Junction Box** to mounting surface using *(2)* **Captive Screws** *(supplied)*, be careful not to drive screws all the way through the cabinet bottom. Use shorter screws if neccessary *(supplied by others)*.
10. Replace and secure **Junction Box Cover** with supplied screws.
11. Follow installation instructions provided with undercabinet light fixture for mounting and connector options.
12. Before powering on make sure that all fixtures connected to **Junction Box** have been properly installed and that all open **Electrical Ports** on the **Junction Box** and fixtures are safely covered with **Electrical Port Covers**.

Fig: 3

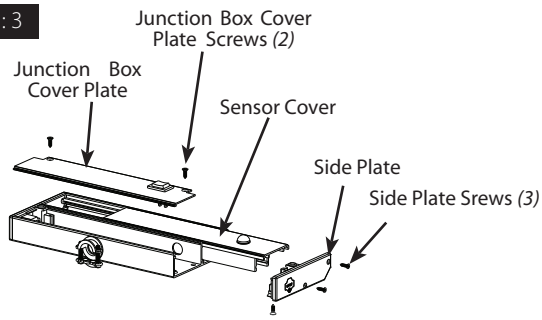

Fig: 4

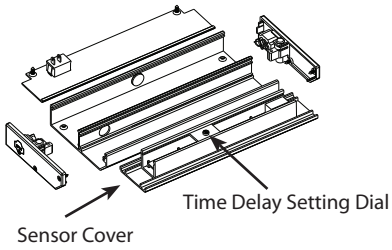

Fig: 5

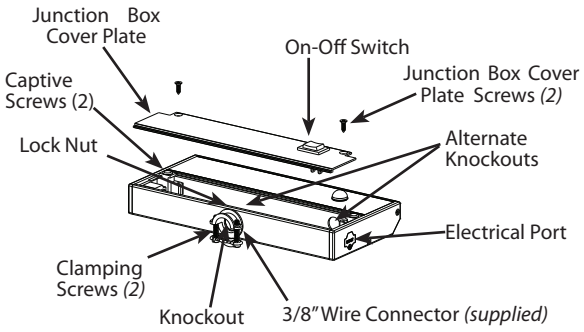

Fig: 6

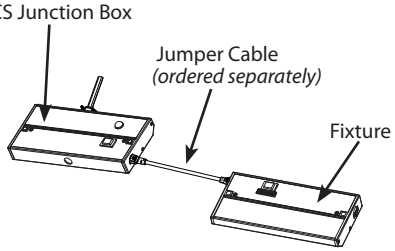

OCSKNOOKFA INSTALLATION INSTRUCTIONS

KNOOK® FA UNDERCABINET

RAB Lighting is committed to creating high-quality, affordable, well-designed and energy-efficient LED lighting and controls that make it easy for electricians to install and end users to save energy. We'd love to hear your comments. Please call the Marketing Department at 888-RAB-1000 or email: marketing@rablighting.com

CLEANING & MAINTENANCE

CAUTION: Be sure fixture temperature is cool enough to touch. Do not clean or maintain while fixture is energized.

1. Clean polycarbonate lens with non-abrasive glass cleaning solution.
2. Do not open fixture to clean the LED. Do not touch the LED.

TROUBLESHOOTING

1. Check that the line voltage at fixture is correct. Refer to wiring directions.
2. Is the fixture grounded properly?

DIMENSIONAL DRAWINGS

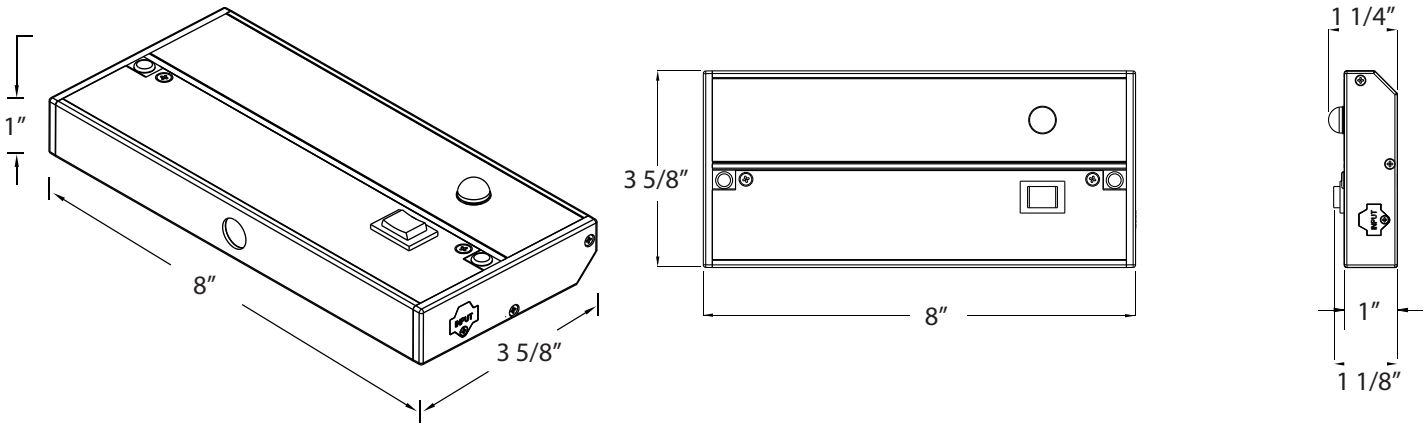

© 2020 RAB LIGHTING Inc.
Northvale, New Jersey 07647 USA

OCSKNOOKFA IN-0420

73693-RAB

Easy Answers

rablighting.com
Visit our website for product info

Tech Help Line
Call our experts: 888 722-1000

e-mail
Answered promptly - sales@rablighting.com

Free Lighting Layouts
Answered online or by request