# RTLED2X2/MVS/E

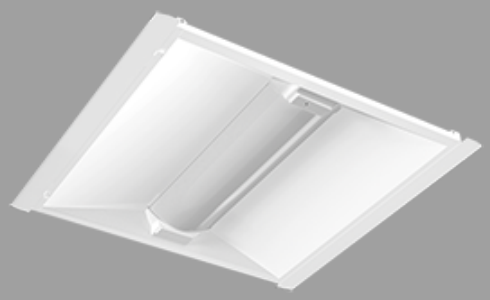

Color: White

Weight: 11.2 lbs

| | |
|---|---|
| **Project:** | **Type:** |
| **Prepared By:** | **Date:** |

### Driver Info

| | |
|---|---|
| Type | Constant |
| 120V | 0.25A/0.21A/0.15A |
| 208V | 0.15A/0.12A/0.09A |
| 240V | 0.13A/0.10A/0.08A |
| 277V | 0.11A/0.10A/0.07A |
| Input Watts | 17-28.58W |

### LED Info

| | |
|---|---|
| Watts | 30/25/18W |
| Color Temp | 3500K/4000K/5000K |
| Color Accuracy | 84-85 CRI |
| L70 Lifespan | 100,000 Hours |
| Lumens | 2,293-3,814 lm |
| Efficacy | 125.69-138.1 lm/W |

## Technical Specifications

### Compliance

**UL Listed:**
Suitable for damp locations

**IESNA LM-79 & LM-80 Testing:**
RAB LED luminaires have been tested by an independent laboratory in accordance with IESNAlm-79 andlm-80

**DLC Listed:**
This product is listed by Design Lights Consortium (DLC) as an ultra-efficient premium product that qualifies for the highest tier of rebates from DLC Member Utilities. Designed to meet DLC 5.1 requirements.
DLC Product Code: S-R1IK8X

### Electrical

**Driver:**
30W: Class 2, Constant Current, 120-277V, 50/60 Hz, 120V: 0.25A, 208V: 0.15A, 240V: 0.13A, 277V: 0.11A

25W: Class 2, Constant Current, 120-277V, 50/60 Hz, 120V: 0.21A, 208V: 0.12A, 240V: 0.10A, 277V: 0.10A

18W: Class 2, Constant Current, 120-277V, 50/60 Hz, 120V: 0.15A, 208V: 0.09A, 240V: 0.08A, 277V: 0.07A

**Dimming Driver:**
Driver includes dimming control wiring for 0-10V dimming systems. Requires separate 0-10V DC dimming circuit. Dims down to 10%.

**THD:**
3.41% at 120V, 4.37% at 277V

**Power Factor:**
99.67% at 120V, 96.3% at 277V

**Battery Backup:**
Battery backup will operate the fixture for 90 minutes if power fails. Wired for 120.

**Surge Protection:**
2.5kV

### Construction

**Housing:**
Steel sheet metal

**Cold Weather Starting:**
The minimum starting temperature is 0°C (32°F)

**Ambient Temperature:**
Suitable for use in up to 40°C (104°F)

**Reflector:**
High-reflectance, powder-coated finish, optimized for uniform light distribution

**Mounting:**
Retrofits into the existing housing

**Lens:**
Polycarbonate lens

**Finish:**
Formulated for high durability and long-lasting color

**Green Technology:**
Mercury and UV free. RoHS-compliant components.

### LED Characteristics

**LEDs:**
Long-life, high-efficacy, surface-mount LEDs

**Color Stability:**
LED color temperature is warrantied to shift no more than 200K in color temperature over a 5-year period

**Color Uniformity:**
RAB's range of Correlated Color Temperature follows the guidelines of the American National Standard for Specifications for the Chromaticity of Solid State Lighting (SSL) Products, ANSI C78.377-2017.

### Performance

**Lifespan:**
100,000-Hour LED lifespan based on IES LM-80 results and TM-21 calculations


Copyright © 2024 RAB Lighting All Rights Reserved Note: Specifications are subject to change at any time without notice

## Technical Specifications (continued)

### Sensor Specifications

**Capacitance Load:**
400VA at 120VAC, 800VA at 230VAC, 1000VA at 277VAC

**Operating Temperature:**
-20°C to +60°C (-4°F to +140°F)

**Relay:**
Zero-cross relay

**Maximum Mounting Height:**
16.4 ft

**Customizable Detection Area:**
10, 50, 75 or 100%

**Time Delay:**
5s, 30s, 1min, 5min, 10min, 20min, 30min

**Cut Off Period:**
0s, 10s, 1min, 5min, 10min, 30min, 1hr, Bi-Level

**Cut-Off Dimming level:**
10, 20, 30, 50%

**Cut-Off Power:**
Less than 1W

**Daylight Threshold:**
Disable/400Lux/350Lux/300Lux/250Lux/200Lux/120 Lux/ 80Lux/50Lux/30Lux/10Lux/2Lux

**Sensor Principle:**
High Frequency

**Microwave Frequency:**
5.8GHz +/- 75MHz

**Microwave Power:**
<0.3mW

**Max Detection Range:**
26 ft diameter at 16 ft mounting height

**Detection Angle:**
About 30 to 150 degrees

**Remote Control Accessory:**
Adjust settings using remote control (catalog# MSR1). Only available with 0-10V dimming driver options. Remote control available here.

### Other

**5 Yr Limited Warranty:**
The RAB 5-year, limited warranty covers light output, driver performance and paint finish. RAB's warranty is subject to all terms and conditions found at rablighting.com/warranty.

**Note:**
All values are typical (tolerance +/- 10%)

**Buy American Act Compliance:**
RAB values USA manufacturing! Upon request, RAB may be able to manufacture this product to be compliant with the Buy American Act (BAA). Please contact customer service to request a quote for the product to be made BAA compliant.


Copyright © 2024 RAB Lighting All Rights Reserved Note: Specifications are subject to change at any time without notice

## Dimensions

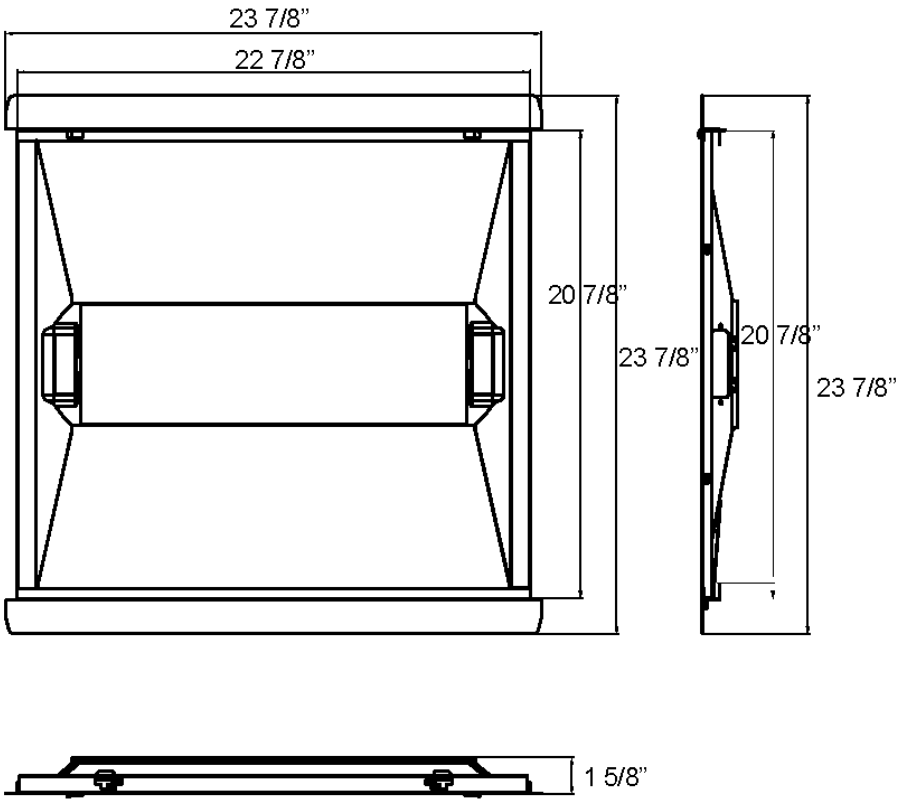


## Ordering Matrix

| Family | Size (Wattages) | Color Temp | Finish | Voltage | Options |
|---|---|---|---|---|---|
| RTLED | 2X2 | | | | /MVS/E |
| | **2X2 =** 2' x 2' (30/25/18W)<br>**1X4 =** 1' x 4' (30/25/18W)<br>**2X4 =** 2' x 4' (35/30/25W) | **Blank =** 3500K/4000K/5000K CCT Adjustable | **Blank =** White | **Blank =** 120-277V, 0-10V Dimming | **Blank =** No Option<br>**/E =** Battery Backup<br>**/MVS =** Microwave Occupancy Sensor<br>**/LCB =** Lightcloud Blue Enabled<br>**/LCBS =** Lightcloud Blue Enabled w/PIR Sensor<br>**/LCBS/MVS =** Lightcloud Blue Enabled w/MVS Sensor<br>**/MVS/E =** Microwave Occupancy Sensor w/Battery Backup<br>**/LCB/E =** Lightcloud Blue Enabled w/Battery Backup<br>**/LCBS/E =** Lightcloud Blue Enabled w/PIR Sensor & Battery Backup<br>**/LCBS/MVS/E =** Lightcloud Blue Enabled w/MVS Sensor & Battery Backup |


Copyright © 2024 RAB Lighting All Rights Reserved Note: Specifications are subject to change at any time without notice