SHARK2

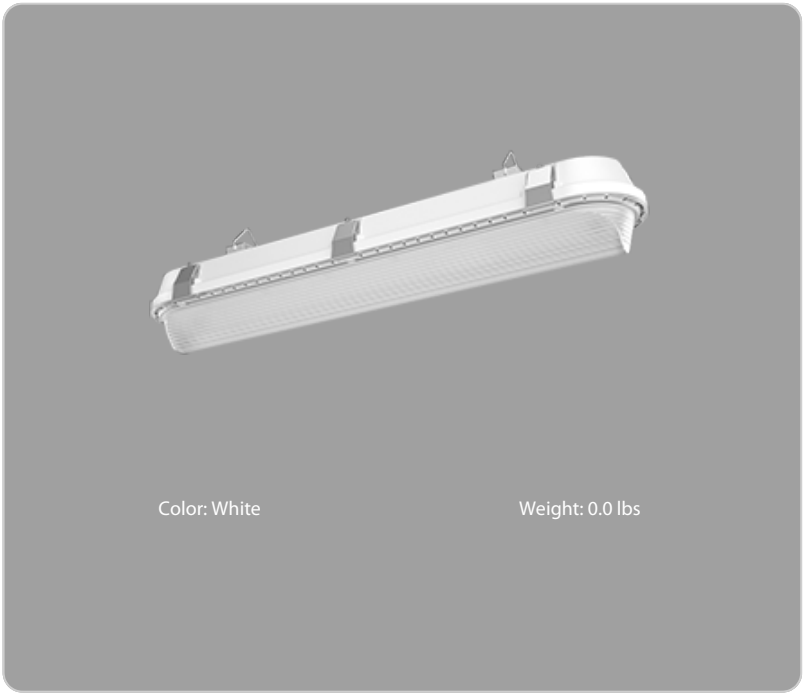

Color: White

Weight: 0.0 lbs

Project:	**Type:**
Prepared By:	**Date:**

Driver Info

Type	Constant Current
120V	0.21A/0.17A/0.13A
208V	0.12A/0.10A/0.09A
240V	0.11A/0.09A/0.08A
277V	0.10A/0.08A/0.07A
Input Watts	16-25.7W

LED Info

Watts	25/20/15W
Color Temp	3500K/4000K/5000K
Color Accuracy	83-85 CRI
L70 Lifespan	100,000 Hours
Lumens	2,270-3,683 lm
Efficacy	137.6-148.2 lm/W

Technical Specifications

Compliance

UL Listed:
Suitable for wet locations

NSF:
NSF Certified by Public Health and Safety

NEMA Rating:
4X, protected against corrosion

IP Rating:
Ingress protection rating of IP66 for dust and water

DLC Listed:
This product is on the Design Lights Consortium (DLC) Qualified Products List and is eligible for rebates from DLC Member Utilities. Designed to meet DLC 5.1 requirements.
DLC Product Code: S-V3CE02 (Direct Linear Ambient Luminaires)
DLC Product Code: S-W04BEC (Stairwell and Passageway Luminaires)

Electrical

Dimming Driver:
Driver includes dimming control wiring for 0-10V dimming systems. Requires separate 0-10V DC dimming circuit. Dims down to 10%.

THD:
2.15% at 120V, 3.37% 277V

Power Factor:
99.8% at 120V, 95.6% at 277V

Surge Protection:
2.5kV

Construction

Housing:
IK09 impact-resistant polycarbonate with 5VA flame rating*
1/2" openings for conduit and bushing/cord entry
*Polycarbonate is affected by cleaning agents or other liquids containing partial solvents such as low molecular weight aldehydes and ethers, ketones, esters, aromatic hydrocarbons and perchlorinated hydrocarbons. Click here for a detailed list of damaging chemicals.

Mounting:
Quick-mount, surface, stainless steel spring clips supplied. 4 additional mounting accessory kits available.

Lens:
Diffuse polycarbonate lens for low glare and maximum protection

Maximum Ambient Temperature:
Suitable for use in up to 40°C (104°F)

Cold Weather Starting:
The minimum starting temperature is -40°C (-40°F)

Green Technology:
Mercury and UV free. RoHS-compliant components.

Finish:
Formulated for high durability and long-lasting color

LED Characteristics

LEDs:
Long-life, high-efficacy, surface-mount LEDs

Color Stability:
LED color temperature is warrantied to shift no more than 200K in color temperature over a 5-year period

Color Uniformity:
RAB's range of Correlated Color Temperature follows the guidelines of the American National Standard for Specifications for the Chromaticity of Solid State Lighting (SSL) Products, ANSI C78.377-2017.

Performance

Lifespan:
100,000-Hour LED lifespan based on IES LM-80 results and TM-21 calculations

Copyright © 2024 RAB Lighting All Rights Reserved Note: Specifications are subject to change at any time without notice

Technical Specifications (continued)

Other

Warranty:

RAB warrants that our LED products will be free from defects in materials and workmanship for a period of five (5) years from the date of delivery to the end user, including coverage of light output, color stability, driver performance and fixture finish. RAB's warranty is subject to all terms and conditions found at rablighting.com/warranty.

Buy American Act Compliance:

RAB values USA manufacturing! Upon request, RAB may be able to manufacture this product to be compliant with the Buy American Act (BAA). Please contact customer service to request a quote for the product to be made BAA compliant.

Dimensions

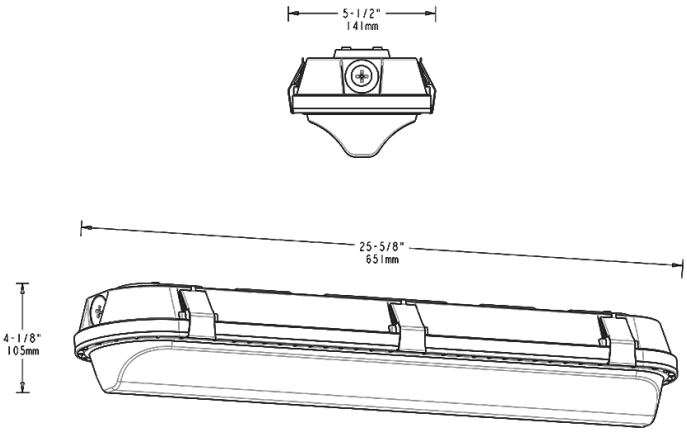

Features

- Impact-resistant linear washdown
- Ideal for tunnels and stairwells
- Mounting options: Chain, junction box, angled surface mount or vandal-resistant surface mount
- IP66 Rating protects against dust & water ingress
- 5-Year, No-Compromise Warranty
- 100,000-Hour LED lifespan

Copyright © 2024 RAB Lighting All Rights Reserved Note: Specifications are subject to change at any time without notice

Ordering Matrix

Family	Size/Wattages	Mounting	Color Temp	Finish	Voltage	Options
SHARK	2					
	2M = 2ft (25/20/15W) Marine Listed **4 =** 4ft (50/40/30W) **4M =** 4ft (50/40/30W) Marine Listed **8 =** 8ft (100/80/60W) **8M =** 8ft (100/80/60W) Marine Listed **2 =** 2ft (25/20/15W)	**Blank =** Metal Bracket with hooks	**Blank =** 3500/4000/5000K CCT Adjustable	**Blank =** White	**Blank =** 120-277V, 0-10V Dimming	**/LCBS/MVS/E =** Lightcloud Blue Enabled w/MVS Sensor & Battery Backup **/LCBS/E =** Lightcloud Blue Enabled w/PIR Sensor & Battery Backup **/PIR/E =** Passive Infrared Occupancy Sensor w/Battery Back Up **/MVS/E =** Microwave Occupancy Sensor w/Battery Backup **/LCBS/MVS =** Lightcloud Blue Enabled w/MVS Sensor **/LCBS =** Lightcloud Blue Enabled w/PIR Sensor **/PIR =** Passive Infrared Occupancy Sensor **/MVS =** Microwave Occupancy Sensor **/LC =** Lightcloud Controller **/E =** Battery Backup **Blank =** No Option

Copyright © 2024 RAB Lighting All Rights Reserved Note: Specifications are subject to change at any time without notice