INSTRUCTIONS
FIELD-ADJUSTABLE SLIM® INSTALLATION

RAB Lighting is committed to creating high-quality, affordable, well-designed and energy-efficient LED lighting and controls that make it easy for electricians to install and end users to save energy. We'd love to hear your comments. Please call the Marketing Department at 888-RAB-1000 or email: marketing@rablighting.com



IMPORTANT

READ CAREFULLY BEFORE INSTALLING FIXTURE. RETAIN THESE INSTRUCTIONS FOR FUTURE REFERENCE.
RAB fixtures must be wired in accordance with the National Electrical Code and all applicable local codes. Proper grounding is required for safety. THIS PRODUCT MUST BE INSTALLED IN ACCORDANCE WITH THE APPLICABLE INSTALLATION CODE BY A PERSON FAMILIAR WITH THE CONSTRUCTION AND OPERATION OF THE PRODUCT AND THE HAZARDS INVOLVED.
WARNING: Make certain power is OFF before installing or adjusting the fixture. No user serviceable parts inside.
Suitable for Wet locations. Suitable for mounting within 1.2m *(4ft)* of the ground. Wall mount only.
CAUTION: For proper weatherproof function all gaskets must be seated properly and all screws inserted and tightened firmly. Apply weatherproof silicone sealant between mounting surface and back housing. This is especially important with an uneven wall surface. Silicone all plugs and unused conduit entries.

MOUNTING

To ensure weatherproof seal, apply weatherproof silicone sealant around the edge of the **Housing** and/or **Junction Box** as shown in Fig 1. This is especially important with an uneven wall surface. Silicone all plugs and unused conduit entries.

1. To open the fixture pull out the **Slide Latch** on the side of the **Housing** as shown in Fig. 1.
2. Rotate **Prop Arm** to vertical position and rest the **Housing Cover** on **Prop Arm** providing hands free wiring (*Fig. 1)*.
3. Knock out appropriate **Slots** when mounting to a Junction Box *(by others)* or install to the mounting surface using appropriate hardware *(Fig. 2)*. Use **Leveling Bubble** to level the fixture.
4. Feed Supply wires through the **Junction Box** or through a conduit location. Check that the **Wall Gasket** is fully seated.
5. Connect the fixture wires to the supply wires making sure to use correct UL rated wires connectors as required by the NEC to complete any electrical splices and connections *(Fig. 4)*.
6. Bundle the wires in a tight group to be moved out of the way and make sure the **Housing Gasket** is properly seated.
7. Rotate **Prop Arm** back to horizontal position. Rotate the **Housing Cover** to close and push in the **Slide Latch** to lock the fixture closed.
8. Silicone all **Plugs** and unused conduit entries. If the outdoor surface is irregular, use caulk to seal any gaps around the housing.

Fig. 1

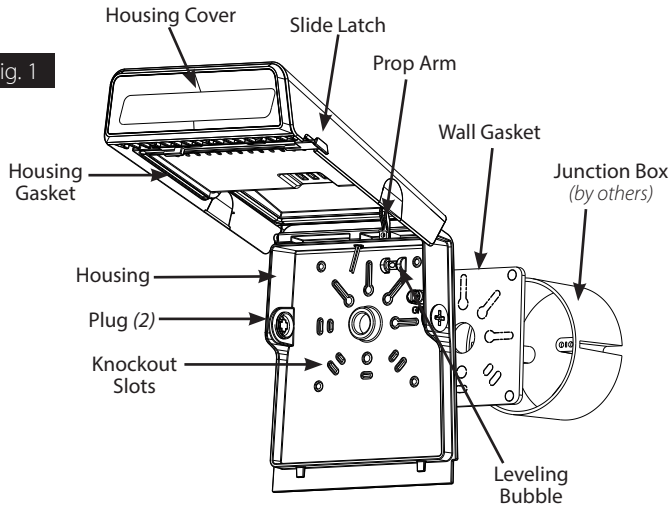

Fig. 2

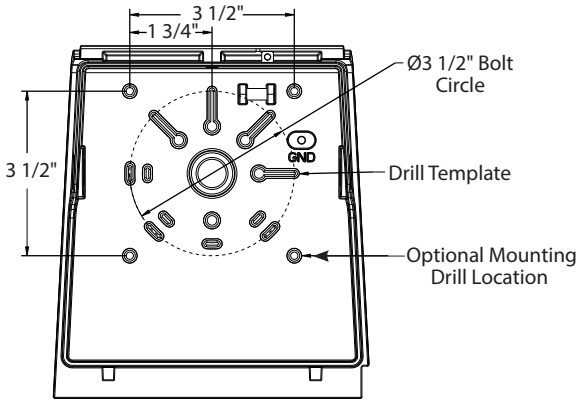

INSTRUCTIONS
FIELD-ADJUSTABLE SLIM® INSTALLATION

RAB Lighting is committed to creating high-quality, affordable, well-designed and energy-efficient LED lighting and controls that make it easy for electricians to install and end users to save energy. We'd love to hear your comments. Please call the Marketing Department at 888-RAB-1000 or email: marketing@rablighting.com

FIELD ADJUSTMENT

Model#: SLIM, SLIMW, SLIMBR

Photocell Operation:

This product is equipped with a photocell. Should you wish to disable this feature, slide the switch to the "Off" position. In addition to the standard photocell features, the fixture will not react to other light sources such as daylight. The fixture will not turn off. ***Allow 15 seconds for light to turn on/off when photocell is in "ON" position.***

Color Temperature *(CCT)* Selection:

This product is equipped with 5000, 4000 or 3000K CCT color temperature selection. For maximum light output use the 4000K Color Temperature.

Power *(Wattage)* Selection:

SLIM, SLIMW, SLIMBR product is equipped with 26/18/12W Power *(W)* output selection.

Follow instructions below to change Photocell ON/OFF operation, Color Temperature *(CCT)* and/or Power *(W)* from factory settings.

Factory Settings:

SLIM, SLIMW, SLIMBR: 26W Power, 4000K CCT, Photocell/OFF

Locate the selector switches on back of housing as shown in Fig. 3.

1. Select Color Temperature *(CCT)*, Power *(W)* and/or Photocell ON/OFF function by sliding the respective switch to the desired value *(Fig. 3)*.

Fig. 3

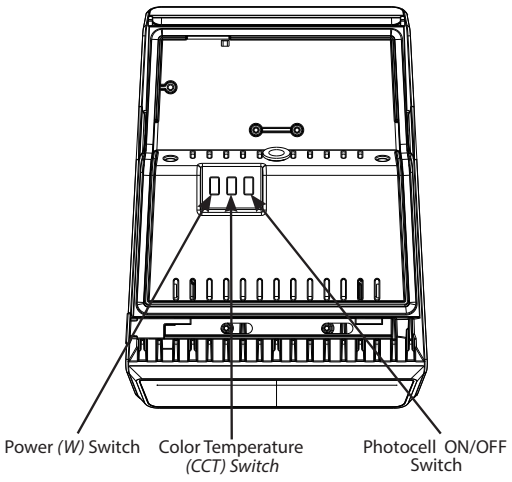

0-10V DIMMABLE WIRING

Universal voltage driver permits operation at 120V through 277V, 50 or 60 Hz. For 0-10V dimming, follow the wiring directions as shown in Fig. 4.

1. Connect the black fixture lead to the LINE supply lead.
2. Connect the white fixture lead to the COMMON supply lead.
3. Connect the GROUND wire from fixture to supply ground.
4. Connect the purple fixture lead to the (V+) DIM lead.
5. Connect the pink fixture lead to the (V-) DIM lead.
6. Cap the yellow fixture lead, if present. Do NOT connect.

NOTE: Do not connect DIM V+ (purple)/ DIM V- (pink) to line voltage or supply ground.

Fig. 4

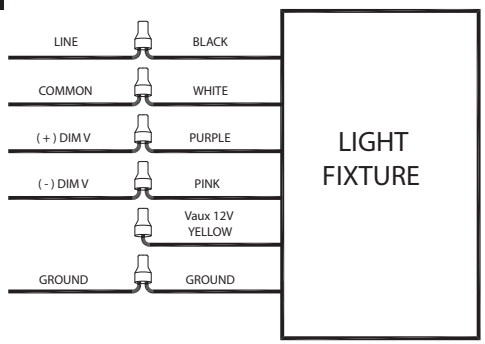

CLEANING & MAINTENANCE

CAUTION: Be sure fixture temperature is cool enough to touch. Do not clean or maintain while fixture is energized.

1. Clean plastic lens with a non-abrasive cleaning solution.
2. Do not clean the LEDs. Do not touch the LEDs.

TROUBLESHOOTING

1. Check that the line voltage at fixture is correct. Refer to wiring directions.
2. Is the fixture grounded properly?
3. Be sure the photocell, if used, is functioning properly.

Note: *These instructions do not cover all details or variations in equipment nor do they provide for every possible situation during installation, operation or*

© 2024 RAB LIGHTING Inc.

SLIM - SLIM6 - 0224
P-100129

RAB WARRANTY: *RAB's warranty is subject to all terms and conditions found at rablighting.com/warranty.*