WFRETRO6



Color: White

Weight: 0.6 lbs

Project:	Type:
Prepared By:	**Date:**

Driver Info

Type	Constant Current, Class 2
120V	0.15A
208V	N/A
240V	N/A
277V	N/A
Input Watts	15/13/11W

LED Info

Watts	15/13/11W
Color Temp	2700/3000/3500/4000/5000K
Color Accuracy	90 CRI
L70 Lifespan	50,000 Hours
Lumens	1,300/1,150/950 lm
Efficacy	87/88/86 lm/W

Technical Specifications

Performance

Product Type:
Wafer Retrofit

Description:
Looks like a wafer-style downlight from below the ceiling but installs into existing recessed housings

Wattage Equivalency:
100W Incandescent

Input Wattage:
15/13/11W

Lumens:
11W
2700K @ 1,034lm;
3000K @ 1,061lm;
3500K @ 1,084lm
4000K @ 1,082lm
5000K @ 1,053lm
13W
2700K @ 1,206lm;
3000K @ 1,245lm;
3500K @ 1,280lm;
4000K @ 1,275lm;
5000K @ 1,230lm
15W
2700K @ 1,340lm;
3000K @ 1,385lm;
3500K @ 1,430lm;
4000K @ 1,424lm;
5000K @ 1,363lm

Efficacy:
11W
2700K @ 99lm/W;
3000K @ 103lm/W;
3500K @ 106lm/W;
4000K @ 106lm/W;
5000K @ 102lm/W
13W
2700K @ 96lm/W;
3000K @ 100lm/W;
3500K @ 104lm/W;
4000K @ 104lm/W;
5000K @ 98lm/W
15W
2700K @ 93lm/W;
3000K @ 97lm/W;
3500K @ 101lm/W;
4000K @ 101lm/W;
5000K @ 95lm/W

L70 Lifespan:
50,000-Hour LED lifespan based on IES LM-70 results

Electrical

Driver:
Constant Current, Class 2, 60 Hz

THD:
20%

Copyright © 2024 RAB Lighting All Rights Reserved Note: Specifications are subject to change at any time without notice

Technical Specifications (continued)

Power Factor:
0.9

Dimmable:
Yes, dimmable down to 10% on compatible TRIAC/ELV dimming systems. See Dimmer Compatibility List.

Input Voltage:
120V

Operating Frequency:
60 Hz

Input Current @ 120V (mA):
150mA

Operating Temperature:
-13°C to 104°F (-25°C to 40°C)

Flicker:
30%

LED Characteristics

Beam Angle:
110°±10°

Color Temperature:
Field adjustable via dip switch
2700K/3000K/3500K/4000K/5000K

Color Accuracy (CRI):
≥90

R9 Value:
High color performance with R9 greater than 50

Color Consistency:
<4-step MacAdam Ellipse binning to achieve consistent fixture-to-fixture color

Color Stability:
LED color temperature is warrantied to shift no more than 200K in color temperature over a 5-year period

Color Uniformity:
RAB's range of Correlated Color Temperature follows the guidelines of the American National Standard for Specifications for the Chromaticity of Solid State Lighting (SSL) Products, ANSI C78.377-2017.

Installation

Mounting:
Recessed mounting using existing downlight housings

Base Type:
E26 Edison Socket Adapter Included in box

Construction

Size:
6"

Shape:
Round

Finish:
White

Enclosure Material:
Plastic+Metal

Trim Style:
Smooth

Lens Finish:
Frosted

Lens:
Polycarbonate light diffuser distributes light evenly and smoothly for general lighting applications

Compliance

Listings:
UL Listed

Environment:
Suitable for use indoors and outdoors in dry, damp, or wet environments.

IC Rated:
No

Air Tight:
Housing certified Air Tight as per ASTM E283

Energy Star Approved:
This product is ENERGY STAR® Version 2.2 Certified.

Energy Star ID:
3398293

DLC Listed:
No

Certification Model Number:
DLW0113(WFRETRO6)

California Title 20 Compliant:
No

California Title 24 JA8 Compliant:
Can be used to conform with the requirements of California Title 24 Part 6

California Energy Commission (CEC) Status:
Lawful for Sales in California

NEC Compliant:
Suitable for use in closets. Compliant with NEC Sec. 410.16 (A)(1) and 410.16 (C3).

IESNA LM-79 & LM-80 Testing:
RAB LED luminaires and LED components have been tested by an independent laboratory in accordance with IESNA LM-79 and LM-80.

RoHS:
Mercury and UV free. RoHS-compliant components.

FCC:
Complies with Part 15 of the FCC Rules

Other

Compatible Accessories:
NDCANIC6R
6" New construction recessed housing IC rated
RDCANIC6R
6" Remodeler recessed housing IC rated
DRI-21-EMGR-DC-D10
Emergency driver T20

Warranty:
RAB warrants that our LED products will be free from defects in materials and workmanship for a period of five (5) years from the date of delivery to the end user, including coverage of light output, color stability, driver performance and fixture finish. RAB's warranty is subject to all terms and conditions found at rablighting.com/warranty.

Note:
All values are typical (tolerance +/- 10%)

Buy American Act Compliance:
RAB values USA manufacturing! Upon request, RAB may be able to manufacture this product to be compliant with the Buy American Act (BAA). Please contact customer service to request a quote for the product to be made BAA compliant.

Copyright © 2024 RAB Lighting All Rights Reserved Note: Specifications are subject to change at any time without notice

Dimensions

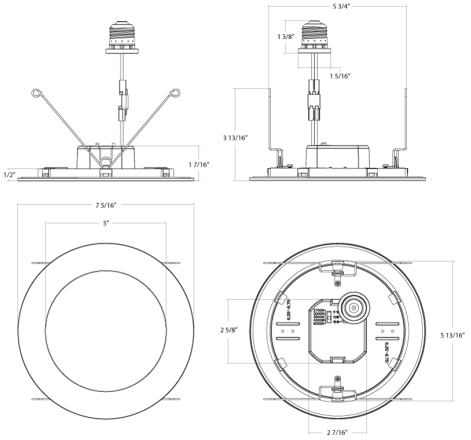

Features

- Edge-lit wafer look that retrofits in existing downlight housings
- Field adjustable: 3 brightness levels & 5 CCTs
- Smooth or step baffle lens
- Mounts inside standard 4" or 5/6" recessed downlight housings

Ordering Matrix

Family	Size/Wattage
WFRETRO	6

4 = 4", 10/8/6W

Copyright © 2024 RAB Lighting All Rights Reserved Note: Specifications are subject to change at any time without notice