X17FA105SF



Ultra-economy field adjustable X17 is available in three sizes and a total of 6 lumen packages, all with a wide 7H x 7V NEMA distribution that makes them the optimal floodlight for a large variety of general-purpose applications. 0-10V dimming is standard on all models.

Color: Bronze

Weight: 9.8 lbs

Project:	**Type:**
Prepared By:	**Date:**

Driver Info

Type	Constant Current
120V	0.87A
208V	0.50A
240V	0.44A
277V	0.38A
Input Watts	106.9/104.62/107.3W

LED Info

Watts	105W
Color Temp	3000K/4000K/5000K
Color Accuracy	83/82/82 CRI
L70 Lifespan	100,000 Hours
Lumens	15,217/16,249/15,679 lm
Efficacy	142.4/155.3/146.1 lm/W

Technical Specifications

Field Adjustability

Field Adjustable:
Color temperature selectable by 3000K, 4000K and 5000K

Compliance

UL Listed:
Suitable for wet locations

IESNA LM-79 & LM-80 Testing:
RAB LED luminaires and LED components have been tested by an independent laboratory in accordance with IESNA LM-79 and LM-80.

IP Rating:
Ingress protection rating of IP65 for dust and water

Electrical

Driver:
Constant Current, Class 1, 120-277V, 50/60Hz, 120V: 0.87A, 208V: 0.50A, 240V: 0.44A, 277V: 0.38A

Dimming Driver:
Driver includes wiring for 0-10V dimming systems. Dim as low as 10%.

THD:
9.12% at 120V, 10.89% at 277V

Power Factor:
99.7% at 120V, 90.4% at 277V

Photocell:
120-277V selectable photocell that can be turned on and off.

Surge Protection:
6kV

LED Characteristics

LEDs:
Long-life, high-efficacy, surface-mount LEDs

Color Uniformity:
RAB's range of Correlated Color Temperature follows the guidelines of the American National Standard for Specifications for the Chromaticity of Solid State Lighting (SSL) Products, ANSI C78.377-2017.

Construction

Cold Weather Starting:
The minimum starting temperature is -40°C (-40°F)

Maximum Ambient Temperature:
Suitable for use in up to 40°C (104°F)

Housing:
Precision die-cast aluminum

Mounting:
Slipfitter with 180° pivot available for mounting on 2 3/8" tenon

Tilt Increment:
Rotates in 6 degree increments

Effective Projected Area:
EPA = 1.05

Lens:
Tempered glass

Reflector:
Polycarbonate

Finish:
Formulated for high durability and long-lasting color

Green Technology:
Mercury and UV free. RoHS-compliant components.

Optical

NEMA Type:
NEMA Beam Spread of 7H x 7V

Copyright © 2024 RAB Lighting All Rights Reserved Note: Specifications are subject to change at any time without notice

Technical Specifications (continued)

Other

5 Yr Limited Warranty:
The RAB 5-year, limited warranty covers light output, driver performance and paint finish. RAB's warranty is subject to all terms and conditions found at rablighting.com/warranty.

Note:
All values are typical (tolerance +/- 10%)

Buy American Act Compliance:
RAB values USA manufacturing! Upon request, RAB may be able to manufacture this product to be compliant with the Buy American Act (BAA). Please contact customer service to request a quote for the product to be made BAA compliant.

Performance

Wattage Equivalency:
Equivalent to 400W Metal Halide

Dimensions

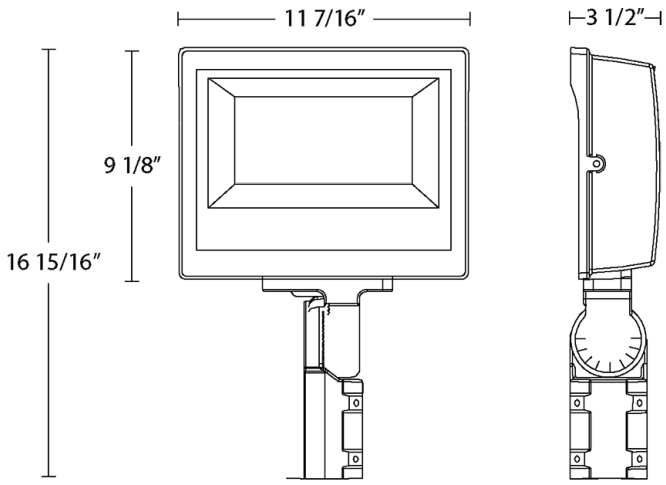

Features

- DLC Premium listed
- IP65 Rated
- 100,000-Hour LED lifespan
- 5-Year, limited warranty

Copyright © 2024 RAB Lighting All Rights Reserved Note: Specifications are subject to change at any time without notice

Ordering Matrix

Family	Wattage	Field Adjustability	Mounting	Finish	Color Temp	Voltage	Options
X17	FA	105		SF			
	35 = 35W **60 =** 60W **80 =** 80W **105 =** 105W **140 =** 140W **15 =** 15W **15 =** 15W **140 =** 140W **105 =** 105W **80 =** 80W **60 =** 60W **35 =** 35W	**FA =** 2-Way Field Adjustable	**T =** Trunnion **SF =** Slipfitter **Blank =** Knuckle	**W =** White **Blank =** Bronze	**Blank =** 3000K/4000K/5000K Adjustable	**/480 =** 480V **Blank =** 120-277V	**Blank =** Selectable photocell

Copyright © 2024 RAB Lighting All Rights Reserved Note: Specifications are subject to change at any time without notice