INSTRUCTIONS
HIGH BAY RAIL® INSTALLATION

RAB Lighting is committed to creating high-quality, affordable, well-designed and energy-efficient LED lighting and controls that make it easy for electricians to install and end users to save energy. We'd love to hear your comments. Please call the Marketing Department at 888-RAB-1000 or email: marketing@rablighting.com



IMPORTANT

READ CAREFULLY BEFORE INSTALLING FIXTURE. RETAIN THESE INSTRUCTIONS FOR FUTURE REFERENCE.
RAB fixtures must be wired in accordance with the National Electrical Code and all applicable local codes. Proper grounding is required for safety. THIS PRODUCT MUST BE INSTALLED IN ACCORDANCE WITH THE APPLICABLE INSTALLATION CODE BY A PERSON FAMILIAR WITH THE CONSTRUCTION AND OPERATION OF THE PRODUCT AND THE HAZARDS INVOLVED.
WARNING: Make certain power is OFF before installing or maintaining fixture. No user serviceable parts inside.
NOTE: Universal voltage driver permits operation at 120V through 277V, 50 or 60Hz. Units ordered with /480V suffix are 480V only. Suitable for damp locations. Indoor use only.

FOR CHAIN MOUNTING TO CEILING

Mount **Housing** to ceiling structure as follows:

1. Connect to two *(2)* equal lengths of chain (*not included*) and/or appropriate hardware (*not included*) suitable for the mounting surface to suspend **Housing** from *(2)* **V-Hooks,** provided *(Fig. 1)*.
2. Fixture mounting height and spacing should be determined by application requirements. Use chain suitable to support four *(4)* times the weight of the fixture.
3. If ordered with **Lightcloud®** *(Fig. 2)*, the assembly may be shipped loose. The elbow will need to be snapped in and rotated to the final position.
4. Remove **Access Plate Assembly** and feed supply wires with strain relief conduit connector through **Access Plate** *(Fig. 3)*. Make electrical connections as shown in wiring diagram *(Fig. 7)*. Use approved wiring connectors and wire to local NEC codes. Push all wires back into **Housing.** Be careful not to pinch wires.
5. Secure **Access Plate** by rotating **Lock Screw** 1/4 turn as shown in Fig. 3.

Fig: 1

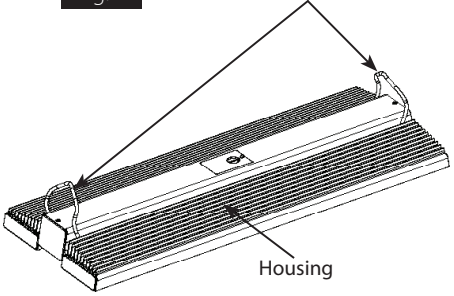

Fig: 2

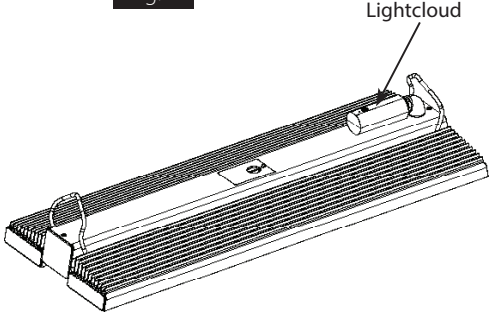

Fig: 3

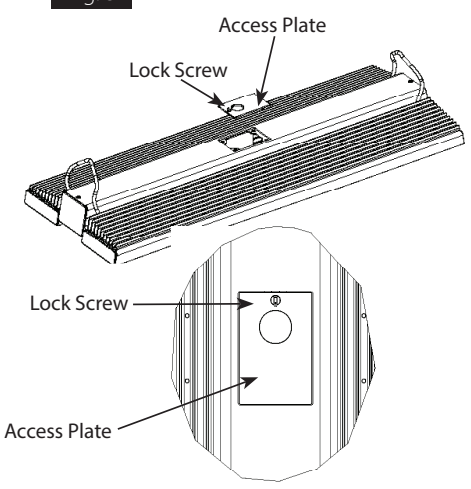

INSTRUCTIONS
HIGH BAY RAIL® INSTALLATION

RAB Lighting is committed to creating high-quality, affordable, well-designed and energy-efficient LED lighting and controls that make it easy for electricians to install and end users to save energy. We'd love to hear your comments. Please call the Marketing Department at 888-RAB-1000 or email: marketing@rablighting.com

FOR PENDANT MOUNTING TO CEILING

Mount **Housing** to ceiling using **Pendant Stem** and **Pendant Cover Assembly** *(ordered separately: RAILP-90W (90W) or RAILP (175-400W)* as follows:

1. Choose length of 3/4" **Pendant Stem** *(not included)*.
2. Separate the **Mounting Plate** *(Fig. 4)* from the **Pendant Cover Assembly** by pulling the **End Cap** *(Fig. 5)* away from the **Pendant Cover Assembly** to release the pin holding the **Mounting Plate** in place.
3. Attach the **Pendant Cover Assembly** to the **Pendant Stem** and tighten the *(not included)* **Locknuts** *(Fig. 5)*.
4. Feed the supply wires through the **Pendant Stem**.
5. Install the **Mounting Plate** on the **Housing**. Tighten the screws *(4)* completely.
6. Hang **Housing** by hooking the **Mounting Plate** onto the **Pendant Cover Assembly**.
7. Make electrical connections as shown in wiring diagram *(Fig. 7)*. Use approved wiring connectors and wire to local NEC codes. Push all wires back into Housing. Be careful not to pinch wires.
8. Push connections into the **Pendant Cover Assembly**.
9. Rotate the **Fixture** up and slide the **End Cap/Pin Assembly** closed. Push the **End Cap** tight and check that it sits flush with the **Pendant Cover Assembly** to ensure it is fully locked.

Fig: 4

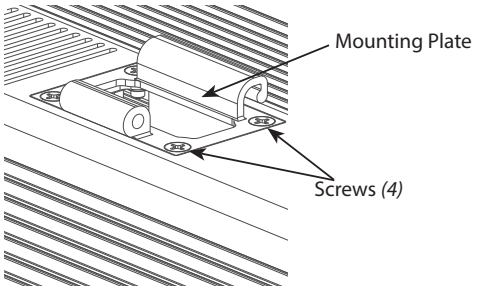

Fig: 5

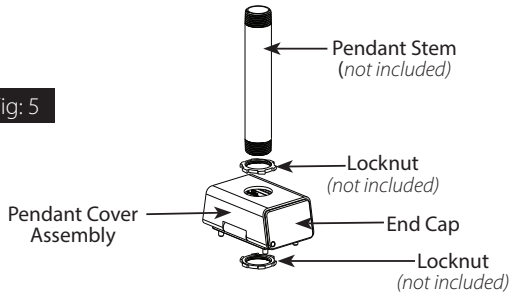

Fig: 6

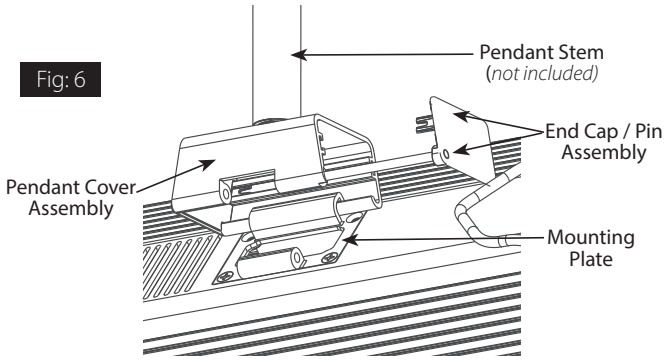

0-10V DIMMABLE WIRING

Universal voltage driver permits operation at 120V through 277V, 50 or 60 Hz. Units ordered with */480* suffix are 480V, 50Hz or 60Hz. For 0-10V dimming follow the wiring directions as shown in Fig. 7.

1. Connect the black fixture lead to the **LINE** supply lead.
2. Connect the white fixture lead to the **COMMON** supply lead.
3. Connect the **GROUND** wire from fixture to supply ground.
4. Connect the purple fixture lead to the **(V+) DIM** lead.
5. Connect the pink fixture lead to the **(V-) DIM** lead.
6. Cap the yellow fixture lead, if present. Do NOT connect.

NOTE: Do not connect DIM V+ (purple)/ DIM V- (pink) to line voltage or supply ground.

Fig: 7

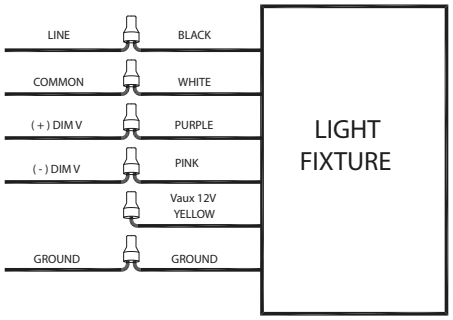

TROUBLESHOOTING

1. Check that the line voltage at fixture is correct. Refer to wiring directions.
2. Be sure the fixture is grounded properly.

CLEANING & MAINTENANCE

CAUTION: Be sure fixture temperature is cool enough to touch. Do not clean or maintain while fixture is energized.

1. Lens should be washed in a solution of warm water and any mild, non-abrasive household detergent, rinse with clean water and wipe dry. Do not use chemicals to clean fixture.
2. Do not open fixture to clean the LED. Do not touch the LED.

Note: *These instructions do not cover all details or variations in equipment nor do they provide for every possible situation during installation, operation or maintenance.*

INSTRUCTIONS
HIGH BAY RAIL® INSTALLATION

RAB Lighting is committed to creating high-quality, affordable, well-designed and energy-efficient LED lighting and controls that make it easy for electricians to install and end users to save energy. We'd love to hear your comments. Please call the Marketing Department at 888-RAB-1000 or email: marketing@rablighting.com

BATTERY BACKUP MODELS

WIRING

CAUTION: FOR BATTERY BACKUP FIXTURE. Voltage can be present in **BATTERY.** To prevent high voltage from being present on output leads, Inverter connector must be open. Do not join **BATTERY** connector until installation is complete and AC power is supplied to the emergency driver *(Fig. 8)*.
NOTE: Make sure that the necessary branch circuit wiring is available. An **UNSWITCHED AC** source of power is required. The emergency driver must be fed from the same branch circuit as the LED driver.
CAUTION: Do not use any supply voltage other than 120-277V 50/60 Hz.

1. Connect **UNSWITCHED HOT** fixture lead to **HOT AC** supply line.
2. If using an **UNSWITCHED** circuit, connect **UNSWITCHED** and **SWITCHED** lines together.
3. If using a **SWITCHED** circuit, connect **SWITCHED HOT** AC fixture lead to the external.
4. For 0-10V dimming, connect **DIM** (+) purple and **DIM** (-) pink leads to dimming connections.
5. All unused leads must be capped and insulated.
6. After installation is complete, supply AC power to the fixture and connect the **BATTERY.**
7. When power is on, the fixture should be on and the **CHARGING INDICATOR LIGHT** should illuminate to indicate the battery is charging.
8. Once the **BATTERY** has charged for at least one hour, a short duration test may be performed by pressing the **Test Button** as shown in Fig. 9.
9. After the battery has charged for 24 hours, a long duration test can be performed by disconnecting power to the fixture.

FIG.8

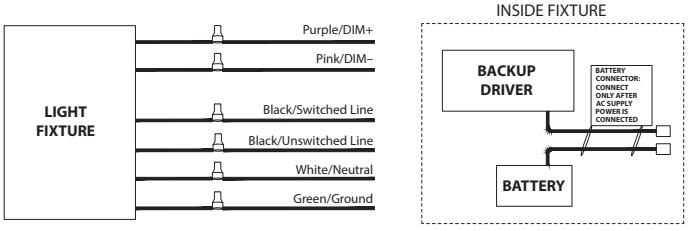

OPERATION

1. When AC power is applied the charging indicator light is illuminated indicating that the **BATTERY** is being charged.
2. When power fails the standby power automatically switches to emergency power *(internal battery)* operating at reduced illumination.
3. When AC power is restored the emergency driver automatically returns to charging mode.

MAINTENANCE

Although no routine maintenance is required to keep the emergency driver functional, it should be checked periodically to ensure that it is working. The following schedule is recommended:

1. Visually inspect the charging indicator light monthly. It should be illuminated
2. Test the emergency operation of the fixture at 30-day intervals for a minimum of 30 seconds.
3. Conduct a 90-minute discharge test once a year. Fixture would operate at reduced illumination for a minimum of 90 minutes.

TROUBLESHOOTING

1. Be sure the fixture is grounded properly.
2. If the charging indicator light does not illuminate after pressing the **Test Button** *(Fig. 9)*, check if battery is connected properly.

FIG. 9

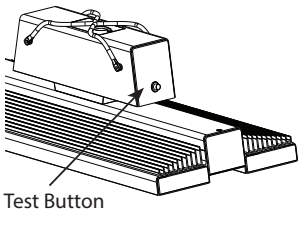

© 2022 RAB LIGHTING Inc.

RAIL - IN - 1122
P-100119

Easy Answers

rablighting.com
Visit our website for product info

Tech Help Line
Call our experts: 888 722-1000

e-mail
Answered promptly - sales@rablighting.com

Free Lighting Layouts
Answered online or by request

RAB WARRANTY: *RAB's warranty is subject to all terms and conditions found at rablighting.com/warranty*