# SEAL2



Color: Gray

Weight: 4.0 lbs

| | |
|---|---|
| **Project:** | **Type:** |
| **Prepared By:** | **Date:** |

### Driver Info

| | |
|---|---|
| Type | Constant Current |
| 120V | 0.23A |
| 208V | 0.13A |
| 240V | 0.12A |
| 277V | 0.10A |
| Input Watts | 25/20/15W |

### LED Info

| | |
|---|---|
| Watts | 25W |
| Color Temp | 3500K/4000K/5000K |
| Color Accuracy | 80 CRI |
| L70 Lifespan | 100,000 Hours |
| Lumens | 2040-3400 lm |
| Efficacy | 130-142 lm/W |

## Technical Specifications

### Compliance

**UL Listed:**
Suitable for wet locations

**UL 94:**
5VA flame classification

**FCC:**
Complies with Part 15B of the FCC Rules

**NSF:**
NSF Certified by Public Health and Safety

**NEMA Rating:**
4X, protected against corrosion

**IESNA LM-79 & LM-80 Testing:**
RAB LED luminaires and LED components have been tested by an independent laboratory in accordance with IESNA LM-79 and LM-80.

**IP Rating:**
Ingress protection rating of IP66 for dust and water

**DLC Listed:**
This product is listed by Design Lights Consortium (DLC) as an ultra-efficient premium product that qualifies for the highest tier of rebates from DLC Member Utilities. Designed to meet DLC 5.1 requirements.
DLC Product Code: S-2WR1TU

### Electrical

**Driver:**
Constant Current, Class 2, 120-277V, 50/60Hz, 120V: 0.23A, 208V:0.13A, 240V: 0.12A, 277V 0.10A

**Dimming Driver:**
Driver includes dimming control wiring for 0-10V dimming systems. Requires separate 0-10V DC dimming circuit. Dims down to 10%.

**THD:**
3.55% at 120V, 4.59% at 277V

**Power Factor:**
99.9% at 120V, 97.74% at 277V

**Surge Protection:**
2.5kV

### LED Characteristics

**LEDs:**
Long-life, high-efficacy, surface-mount LEDs

**Color Uniformity:**
RAB's range of Correlated Color Temperature follows the guidelines of the American National Standard for Specifications for the Chromaticity of Solid State Lighting (SSL) Products, ANSI C78.377-2017.

### Performance

**Lifespan:**
100,000-Hour LED lifespan based on IES LM-80 results and TM-21 calculations

**Wattage Equivalency:**
Equivalent to (2) F32T8 or (3) F17T8

### Construction

**IK Rating:**
IK08 Protected against 5 joules of impact. Equivalent to the impact of a 3.75 lbs. (1.7kg) mass dropped from 11.8" (300mm) above the impacted surface.

**Housing:**
Impact-resistant polycarbonate* with stainless steel door clips. 1/2" NPS opening for conduit and bushing/cord entry. *Polycarbonate is affected by cleaning agents or other liquids containing partial solvents such as low molecular weight aldehydes and ethers, ketones, esters, aromatic hydrocarbons and perchlorinated hydrocarbons. Click here for a detailed list of damaging chemicals.

**Mounting:**
Quick-mount, stainless steel snap on brackets supplied for surface mounting. V-Hook brackets supplied standard for suspending the fixture.


Copyright © 2024 RAB Lighting All Rights Reserved Note: Specifications are subject to change at any time without notice

## Technical Specifications (continued)

**Lens:**
Diffuse polycarbonate lens for low glare and maximum protection

**Reflector:**
Cold-rolled steel

**Gaskets:**
High-temperature silicone gaskets

**Cold Weather Starting:**
The minimum starting temperature is -40°C (-40°F)

**Ambient Temperature :**
Max Power Temp Rating: 40°C (104°F)
Middle Power Temp Rating: 48°C (117°F)
Low Power Temp Rating: 51°C (123°F)

**Installation:**
Tether Cables are provided for easy installation. Quick connector may be used for quick and easy wiring.

**Green Technology:**
Mercury and UV free. RoHS-compliant components.

**Finish:**
Formulated for high durability and long-lasting color

### Other

**5 Yr Limited Warranty:**
The RAB 5-year, limited warranty covers light output, driver performance and paint finish. RAB's warranty is subject to all terms and conditions found at rablighting.com/warranty.

**Buy American Act Compliance:**
RAB values USA manufacturing! Upon request, RAB may be able to manufacture this product to be compliant with the Buy American Act (BAA). Please contact customer service to request a quote for the product to be made BAA compliant.


Copyright © 2024 RAB Lighting All Rights Reserved Note: Specifications are subject to change at any time without notice

## Dimensions

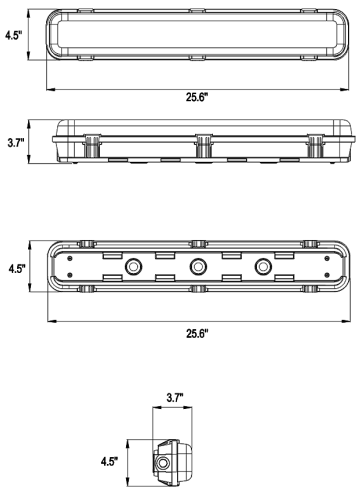


## Features

- 100,000-Hour LED lifespan
- DLC Premium Listed
- 0-10V dimming, standard
- 5-Year, limited warranty

## Ordering Matrix

| Family | Length/Wattage | Color Temp | Finish | Voltage | Options |
|---|---|---|---|---|---|
| SEAL | 2 | | | | |
| | **2 =** 2 ft 25/20/15W<br>**4 =** 4 ft 50/40/30W<br>**8 =** 8 ft 100/80/60W | **Blank =** 3500K/4000K/5000K CCT Adjustable | **Blank =** Gray | **Blank =** 0-10V Dimming, 120-277V | **Blank =** No Option<br>**/PIR =** Passive Infrared Sensor<br>**/MVS =** Microwave Occupancy Sensor<br>**/E =** Battery Backup<br>**/LCBS =** Lightcloud Blue Enabled w/PIR Sensor<br>**/LCBS/MVS =** Lightcloud Blue Enabled w/MVS Sensor<br>**/MVS/E =** Microwave Occupancy Sensor w/Battery Backup<br>**/PIR/E =** Passive Infrared Sensor w/Battery Backup<br>**/LCBS/E =** Lightcloud Blue Sensor w/Battery Backup<br>**/LCBS/MVS/E =** Lightcloud Blue Microwave Occupancy Sensor w/Battery Backup |


Copyright © 2024 RAB Lighting All Rights Reserved Note: Specifications are subject to change at any time without notice