WPX1W



Color: White

Weight: 6.2 lbs

Project:	**Type:**
Prepared By:	**Date:**

Driver Info

Type	Constant
120V	0.28A/0.22A/0.14A
208V	0.14A/0.10A/0.07A
240V	0.13A/0.08A/0.06A
277V	0.12A/0.07A/0.05A
Input Watts	17.7-33.3W

LED Info

Watts	30/20/15W
Color Temp	3000K/4000K/5000K
Color Accuracy	82-84 CRI
L70 Lifespan	100,000 Hours
Lumens	2,497-4,739 lm
Efficacy	134.6-146.8 lm/W

Technical Specifications

Field Adjustability

Field Adjustable:
Field Adjustable Light Output:
30W/20W/15W (factory default 30W)
Color temperature selectable 3000K, 4000K and 5000K (factory default 4000K)

Compliance

UL Listed:
Suitable for wet locations

IP Rating:
Ingress protection rating of IP65 for dust and water

Trade Agreements Act Compliant:
This product is a product of Cambodia and a "designated country" end product that complies with the Trade Agreements Act

DLC Listed:
This product is listed by Design Lights Consortium (DLC) as an ultra-efficient premium product that qualifies for the highest tier of rebates from DLC Member Utilities. Designed to meet DLC 5.1 requirements.
DLC Product Code: S-MW1VZF

Electrical

Driver:
Constant Current, Class 2, 120-277V, 50/60 Hz
30W: 120V: 0.28A 208V: 0.14A, 240V: 0.13A, 277V: 0.12A
20W: 120V: 0.22A 208V: 0.10A, 240V: 0.08A, 277V: 0.07A
15W: 120V: 0.14A 208V: 0.07A, 240V: 0.06A, 277V: 0.06A

Dimming Driver:
Driver includes dimming control wiring for 0-10V dimming systems. Requires separate 0-10V DC dimming circuit. Dims down to 10%.

THD:
30W: 2.82% at 120V, 9.29% at 277V
20W: 3.16% at 120V, 11.85% at 277V
15W: 5.05% at 120V, 20.56% at 277V

Power Factor:
30W: 99.7% at 120V, 93.5% at 277V
20W: 99.6% at 120V, 90.2% at 277V
15W: 98.9% at 120V, 81.6% at 277V

Photocell:
Integrated photocell included with on/off switch

Surge Protection:
4kV

Performance

Lifespan:
100,000-Hour LED lifespan based on IES LM-80 results and TM-21 calculations

Wattage Equivalency:
30W: Replaces up to 125W Metal Halide (MH) or 100W High Pressure Sodium (HPS)
20W: Replaces up to 100W Metal Halide (MH) or 100W High Pressure Sodium (HPS)
15W: Replaces up to 70W Metal Halide (MH) or 70W High Pressure Sodium (HPS)

LED Characteristics

LEDs:
Long-life, high-efficacy, surface-mount LEDs

Color Uniformity:
RAB's range of Correlated Color Temperature follows the guidelines of the American National Standard for Specifications for the Chromaticity of Solid State Lighting (SSL) Products, ANSI C78.377-2017.

Construction

Housing:
Aluminum alloy

Mounting:
Hinged wiring access and conduit entries on the back sides, top and bottom make installation a snap

Copyright © 2024 RAB Lighting All Rights Reserved Note: Specifications are subject to change at any time without notice

Technical Specifications (continued)

Lens:
Prismatic, heat-resistant borosilicate glass

Reflector:
Aluminum

Gaskets:
High-temperature silicone

Cold Weather Starting:
The minimum starting temperature is -40°C (-40°F)

Maximum Ambient Temperature:
Suitable for use in up to 40°C (104°F)

Green Technology:
Mercury and UV free. RoHS-compliant components.

Finish:
Formulated for high durability and long-lasting color

Other

Warranty:
RAB warrants that our LED products will be free from defects in materials and workmanship for a period of ten (10) years from the date of delivery to the end user, including coverage of light output, color stability, driver performance and fixture finish. RAB's warranty is subject to all terms and conditions found at rablighting.com/warranty.

Note:
All values are typical (tolerance +/- 10%)

Buy American Act Compliance:
RAB values USA manufacturing! Upon request, RAB may be able to manufacture this product to be compliant with the Buy American Act (BAA). Please contact customer service to request a quote for the product to be made BAA compliant.

Copyright © 2024 RAB Lighting All Rights Reserved Note: Specifications are subject to change at any time without notice

Dimensions

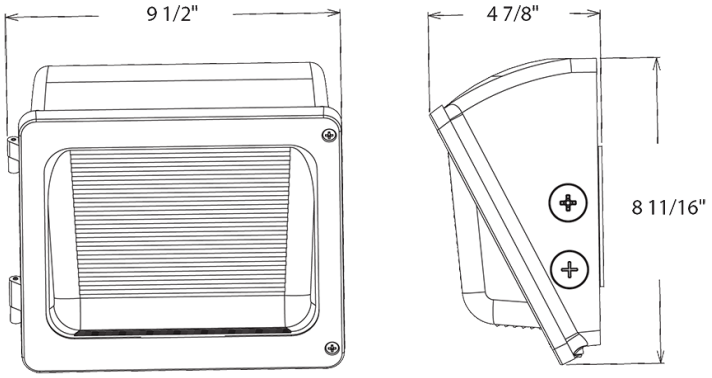

Features

100,000-Hour LED lifespan

0-10V dimming standard

10-Year, no-compromise warranty

Ordering Matrix

Family	Wattage	Color Temp	Finish	Voltage	Options
WPX	1		W		
	1 = 30/20/15W **2 =** 80/60/40W **3 =** 130/100/65W	**Blank =** 3000K/4000K/5000K Adjustable	**Blank =** Bronze **W =** White	**Blank =** 120-277V, 0-10V Dimming **/480 =** 480V, 0-10V Dimming [1]	**Blank =** Selectable On/Off Photocell **/MVS =** Microwave Motion Sensor **/LC =** Lightcloud Controller **/LCB =** Lightcloud Blue Enabled [2] **/LCBS/MVS =** Lightcloud Blue Enabled w/MVS Sensor **/E =** Battery Backup [3] **/MVS/E =** Microwave Motion Sensor w/Battery Backup [3] **/LC/E =** Lightcloud Controller w/Battery Backup [3]

[1] *480V available only in WPX2 and WPX3 models*

[2] */LCB option available only for 120-277V models*

[3] *Battery backup available only for WPX2 and WPX3 in 120-277V models*

Copyright © 2024 RAB Lighting All Rights Reserved Note: Specifications are subject to change at any time without notice