TOMO-2

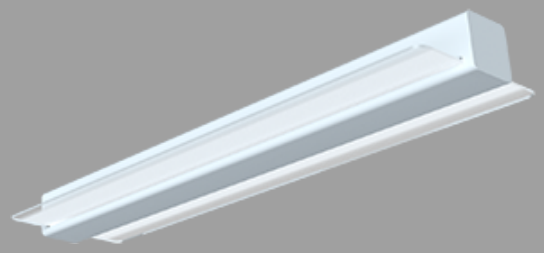

Color: White

Weight: 5.0 lbs

Project:	**Type:**
Prepared By:	**Date:**

Driver Info

Type	Constant Current
120V	0.15A
208V	0.09A
240V	0.08A
277V	0.07A
Input Watts	12.5-24.6W

LED Info

Watts	18W
Color Temp	3000K/3500K/4000K/5000K
Color Accuracy	84 CRI
L70 Lifespan	100,000 Hours
Lumens	1540-3332 lm
Efficacy	122.2-135.4 lm/W

Technical Specifications

Field Adjustability

Field Adjustable:
Field Adjustable Light Output:
24W/18W/12W (factory default 18W)
Color temperature (selectable by 5000K, 4000K, 3500K and 3000K)

Compliance

UL Listed:
Suitable for damp locations

IESNA LM-79 & LM-80 Testing:
RAB LED luminaires and LED components have been tested by an independent laboratory in accordance with IESNA LM-79 and LM-80.

Trade Agreements Act Compliant:
This product is a product of Cambodia and a "designated country" end product that complies with the Trade Agreements Act

DLC Listed:
This product is on the Design Lights Consortium (DLC) Qualified Products List and is eligible for rebates from DLC Member Utilities. Designed to meet DLC 5.1 requirements.
DLC Product Code: S-241I73

Electrical

Driver:
12W: Constant Current, Class 2, 120-277V, 50/60Hz, 120V: 0.10A, 208V: 0.06A, 240V: 0.05A, 277V: 0.05A
18W: Constant Current, Class 2, 120-277V, 50/60Hz, 120V: 0.15A, 208V: 0.09A, 240V: 0.08A, 277V: 0.07A
24W: Constant Current, Class 2, 120-277V, 50/60Hz, 120V: 0.20A, 208V: 0.12A, 240V: 0.10A, 277V: 0.09A

Dimming Driver:
Driver includes dimming control wiring for 0-10V dimming systems. Requires separate 0-10V DC dimming circuit. Dims down to 5%.

THD:
6.1% at 120V, 8.5% at 277V

Power Factor:
99.8% at 120V, 97.5% at 277V

Surge Protection:
1-2kV

Performance

Lifespan:
100,000-Hour LED lifespan based on IES LM-80 results and TM-21 calculations

Wattage Equivalency:
12W: Replaces up to (1) F32T8 or (1) F17T8
18W: Replaces up to (1) F32T8 or (2) F17T8
24W: Replaces up to (1) F32T8 or (3) F17T8

LED Characteristics

LEDs:
Long-life, high-efficiency, surface-mount LEDs

Color Consistency:
4-step MacAdam Ellipse binning to achieve consistent fixture-to-fixture color

Color Uniformity:
RAB's range of Correlated Color Temperature follows the guidelines of the American National Standard for Specifications for the Chromaticity of Solid State Lighting (SSL) Products, ANSI C78.377-2017.

Construction

Cold Weather Starting:
The minimum starting temperature is -20°C (-4°F)

Maximum Ambient Temperature:
Suitable for use in up to 55°C (131°F)

Housing:
Cold Rolled Carbon Steel Sheets and Strip (SPCC)

Copyright © 2024 RAB Lighting All Rights Reserved Note: Specifications are subject to change at any time without notice

Technical Specifications (continued)

Lens:
Diffused Polymethyl Methacrylate (PMMA)

Mounting:
Comes standard with two mounting accessories: aircraft cable for secure, suspended mounts and a stainless bracket for easy mounting to junction boxes.

Finish:
Formulated for high durability and long-lasting color

Green Technology:
Mercury and UV free. RoHS-compliant components.

Other

Lighting Pattern:
70% downlight, 30% uplight

Accessories:
Fixture to fixture connector: TOMO CONNECT

Warranty:
RAB warrants that our LED products will be free from defects in materials and workmanship for a period of five (5) years from the date of delivery to the end user, including coverage of light output, color stability, driver performance and fixture finish. RAB's warranty is subject to all terms and conditions found at rablighting.com/warranty.

Buy American Act Compliance:
RAB values USA manufacturing! Upon request, RAB may be able to manufacture this product to be compliant with the Buy American Act (BAA). Please contact customer service to request a quote for the product to be made BAA compliant.

Copyright © 2024 RAB Lighting All Rights Reserved Note: Specifications are subject to change at any time without notice

Dimensions

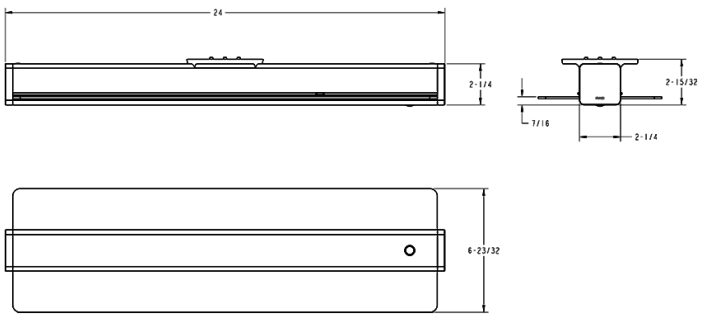

Features

- 0-10V dimming
- 100,000-Hour LED lifespan
- 5-Year, No-Compromise Warranty

Ordering Matrix

Family		Length (Wattages)	Color Temp	Finish	Voltage	Options
TOMO	–	2				
		4 = 4' (48/36/24W) **8 =** 8' (96/72/48W) **2 =** 2' (24/18/12W)	**Blank =** 3000K/3500K/4000K/5000K CCT Adjustable	**Blank =** White	**Blank =** 120-277V, 0-10V Dimming	**/LCBS/E =** Lightcloud Blue Enabled w/PIR Sensor and Battery Backup [1] **/LCB/E =** Lightcloud Blue-enabled w/Battery Backup [1] **/LCBS =** Lightcloud Blue-enabled w/PIR sensor **/LCB =** Lightcloud Blue-enabled **/PIR/E =** Passive Infrared Occupancy Sensor w/Battery Backup [1] **/LC/E =** Lightcloud Control w/Battery Backup [1] **/LCS =** Lightcloud Sensor **/LC =** Lightcloud Controller **/E =** Battery Backup [1] **/PIR =** Passive Infrared Occupancy Sensor **Blank =** No Option

[1] **Available only for 4' and 8'*

Copyright © 2024 RAB Lighting All Rights Reserved Note: Specifications are subject to change at any time without notice