VAN17, 3-Way Adjustable Canopy Light

VAN17 (8" x 8")



VAN17 (10" x 10")

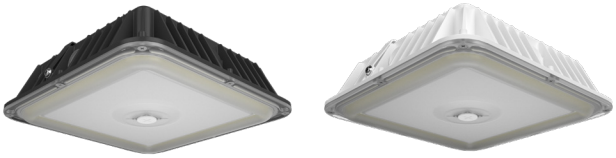

PROJECT:

DATE:

TYPE:

PREPARED BY:

KEY FEATURES

- 3-way adjustable, high-efficacy, low profile canopy light
- 18 fixtures in 1
- Field-adjustable CCT (3000K/4000K/5000K)
- Available sizes / wattages:
  VAN17-30 (8" x 8"): 30/25/20W
  VAN17-50 (8" x 8"): 50/40/30W
  VAN17-60 (10" x 10"): 60/50/40W
  VAN17-90 (10" x 10"): 90/80/70W
- Built-in on/off photocell
- Screw-in sensor accessories offered
- Integrated expansion port for use with motion sensors or lightcloud blue
- Impact-resistant, vandal-resistant
- Ideal for canopy applications
- Suitable for parking garages
- Battery backup option available
- 0-10V dimming standard
- UL listed for wet locations
- 5-year, limited warranty

3-Way adjustable, ultra-economy canopy light

IP65 IP RATING | FIELD ADJUSTABLE | 0-10V DIMMABLE | VANDAL RESISTANT | HE HIGH EFFICACY | 100,000 HRS | WET RATED

TECHNICAL SPECIFICATIONS

COMPLIANCE

UL Listed
UL listed for wet locations

IP Rating
Ingress protection rating of IP656 for dust and water

DLC Listed
This product is listed by Design Lights Consortium (DLC) as an ultra-efficient premium product that qualifies for the highest tier of rebates from DLC Member Utilities. Designed to meet DLC 5.1 requirements.

Model#	DLC Product ID
	Parking Garage Luminaires
VAN17-30	S-FZWKWK
VAN17-50	S-FN8SQ4
VAN17-60	S-HMZ62Z
VAN17-90	S-J6MK6Y

LED CHARACTERISTICS

LEDS
Long-life, high-efficacy, surface-mount LEDs

CONSTRUCTION

Cold Weather starting
Minimum starting temperature is -40°C (-40°F)

Maximum Ambient Temperature
Suitable for use in up to 50°C (122°F)

Cold Weather starting for Battery Backup
Minimum starting temperature is 0°C (32°F)

Maximum Ambient Temperature for Battery Backup
Suitable for use in up to 40°C (104°F)

Housing
Precision die-cast aluminum housing and door frame

Mounting
Retrofit mounting plates for ceiling mounting

Lens
Vandal-resistant polycarbonate textured opaque for low-glare lens

Reflector
Plastic

Green Technology
Mercury and UV free. RoHs-compliant components.

Finish
Formulated for high durability and long lasting color

TECHNICAL SPECIFICATIONS

FIELD ADJUSTABLE

Color temperature: Selectable by 3000K, 4000K and 5000K (factory default 4000K)

Selectable wattages:
VAN17-30 (8" x 8"): 30/25/20W (factory default: 30W)
VAN17-50 (8" x 8"): 50/40/30W (factory default: 50W)
VAN17-60 (10" x 10"): 60/50/40W (factory default: 60W)
VAN17-90 (10" x 10"): 90/80/70W (factory default: 90W)

On/Off Photocell: Factory default: Off

ELECTRICAL

Drivers:
Constant Current, Class 2, 120-277V, 50/60 Hz

VAN17-30:

30W: 120V: 0.25A, 208V: 0.15A, 240V: 0.13A, 277V: 0.10A
25W: 120V: 0.21A, 208V: 0.12A, 240V: 0.10A, 277V: 0.09A
20W: 120V: 0.17A, 208V: 0.10A, 240V: 0.08A, 277V: 0.07A

VAN17-50:

50W: 120V: 0.42A, 208V: 0.25A, 240V: 0.21A, 277V: 0.18A
40W: 120V: 0.33A, 208V: 0.19A, 240V: 0.17A, 277V: 0.14A
30W: 120V: 0.25A, 208V: 0.14A, 240V: 0.13A, 277V: 0.11A

VAN17-60:

60W: 120V: 0.50A, 208V: 0.29A, 240V: 0.25A, 277V: 0.22A
50W: 120V: 0.42A, 208V: 0.24A, 240V: 0.20A, 277V: 0.18A
40W: 120V: 0.33A, 208V: 0.19A, 240V: 0.17A, 277V: 0.14A

VAN17-90:

90W: 120V: 0.75A, 208V: 0.43A, 240V: 0.38A, 277V: 0.32A
80W: 120V: 0.67A, 208V: 0.38A, 240V: 0.33A, 277V: 0.29A
70W: 120V: 0.58A, 208V: 0.34A, 240V: 0.29A, 277V: 0.25A

Dimming Driver:
Driver includes dimming control wiring for 0-10V dimming systems. Requires separate 0-10V DC dimming circuit. Dims down to 10%.

Battery Backup:
Battery backup will operate the fixture 90 minutes if power fails. Wired for 120-277V

Photocell
120-277V compatible, Integrated Button Photocell included.

Note
All values are typical (tolerance +/- 10%)

PERFORMANCE

Lifespan
100,000-hour LED lifespan based on IES LM-80 results and TM-21 calculations

LIGHTCLOUD BLUE (ACCESSORIES)

Lightcloud Blue-enabled:
Lightcloud Blue (LCB) is a Bluetooth Mesh wireless lighting control system that allows you to control RAB's various compatible devices. With RAB's patented Rapid Provisioning technology, devices can be quickly and easily commissioned for residential and large commercial applications using the Lightcloud Blue mobile app. Each device in a system can communicate with any other device, eliminating the need for a Gateway or Hub and maximizing the control system's reach.

DLC system - N1XMLOEATBA (Interior); NHCZ2BIA17L (Exterior)

Learn more at www.lightcloud.com

OCCUPANCY SENSORS(ACCESSORIES)

Sensor Type: Passive Infrared (PIR) or Microwave (MVS)

Input Voltage: 12VDC

Operating Frequency: 50/60Hz

Input Current: 30mA

Operating Temperature: -40°F to 140°F (-20°C to 60°C)

Max Mounting Height: 40 ft. (PIR); 50 ft (MVS)

Detection Range: PIR: 40 ft. diameter mounted at 40 ft. (/PIR & /LCBS); MVS: 50 ft. diameter mounted at 50 ft. (/MVS & /LCBS/MVS); PIR20[B][/LCB] and MVS20[B][/LCB] 20 ft. diameter mounted at 9 ft. (sold separately)

Daylight Sensing: The sensor will determine to trigger the light(s) on or not based on the daylight threshold level set.

Default Settings:

Motion Sensitivity: High

Brightness when triggered : 100%

Hold time: 1 minute (20 minutes for LCB sensors)

Standby to dim: 20%

Standby time: 1 minute

When vacant: Off

Adjustable Settings: Settings for Lightcloud Blue-enabled sensors can be adjusted using the mobile app. All other sensors will require MSR1 Remote to adjust the following sensor settings:

Standby to dim: 10%/20%/30%/50%

Standby time: 0s/10s/30s/1min/5min/10min/30min/60min/+∞

Daylight Threshold: 2Lux/10Lux/30Lux/50Lux/80Lux/120Lux/Disable

OTHER

Warranty

The RAB 5-year, limited warranty covers light output, driver performance and paint finish. RAB's warranty is subject to all terms and conditions found at rablighting.com/warranty.

VAN17, 3-Way Adjustable Canopy Light

DIMENSIONS

VAN17-30 & VAN17-50

Weighs: 2.98 lbs
3.70 lbs w/ battery backup

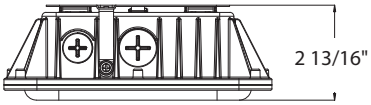

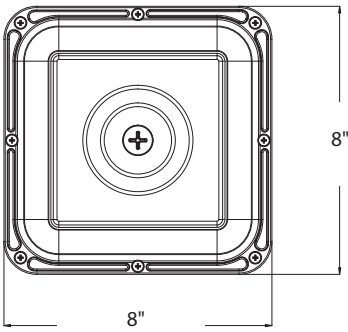

VAN17-60 & VAN17-90

Weighs: 4.25 lbs
9.37 lbs w/ battery backup

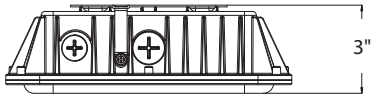

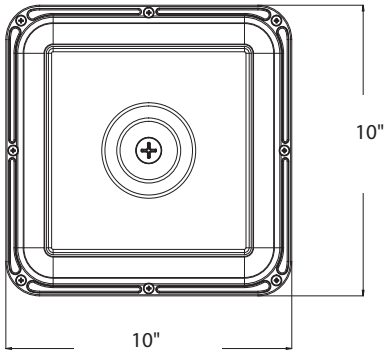

ACCESSORIES

Image	SKU#	UPC	Description	Weight
	VAN17PLATE	192552032575	RETROPLATE FOR VAN17 MOUNTING BRONZE	1.3lbs
	VAN17PLATE-W	192552032568	RETROPLATE FOR VAN17 MOUNTING WHITE	1.32lbs
	MSR1	192552026055	MULTI SENSOR REMOTE	0.25 lb

ACCESSORIES (CONTINUED)

Image	SKU#	UPC	Description	Weight
	MVS50	192552025997	HIGH CEILING LOW VOLTAGE MVS SENSOR WHITE	0.10 lb
	MVS50B	192552042314	HIGH CEILING LOW VOLTAGE MVS SENSOR BLACK	0.10 lb
	MVS50/LCB	192552014168	LC BLUE HIGH CEILING LOW VOLT LUMINAIRE CONTROLLER W/MVS WHITE	0.14 lb
	MVS50B/LCB	192552036924	LC BLUE HIGH CEILING LOW VOLT LUMINAIRE CONTROLLER W/MVS BLACK	0.14 lb
	PIR40	192552026000	HIGH CEILING LOW VOLTAGE PIR SENSOR WHITE	0.10 lb
	PIR40B	192552042307	HIGH CEILING LOW VOLTAGE PIR SENSOR BLACK	0.10 lb
	PIR40/LCB	192552014151	LC BLUE HIGH CEILING LOW VOLT LUMINAIRE CONTROLLER W/PIR WHITE	0.12 lb
	PIR40B/LCB	192552036917	LC BLUE HIGH CEILING LOW VOLT LUMINAIRE CONTROLLER W/PIR BLACK	0.12 lb
	PIR20	192552026024	LOW CEILING LOW VOLTAGE PIR SENSOR WHITE	0.10 lb
	PIR20/LCB	192552042246	LC BLUE LOW CEILING LOW VOLT LUMINAIRE CONTROLLER WITH PIR WHITE	0.10 lb
	PIR20B	192552042284	LOW CEILING LOW VOLTAGE PIR SENSOR BLACK	0.10 lb
	PIR20B/LCB	192552042260	LC BLUE LOW CEILING LOW VOLT LUMINAIRE CONTROLLER WITH PIR BLACK	0.10 lb
	MVS20	192552026017	LOW CEILING LOW VOLTAGE MVS SENSOR WHITE	0.10 lb
	MVS20/LCB	192552042253	LC BLUE LOW CEILING LOW VOLT LUMINAIRE CONTROLLER WITH MVS WHITE	0.10 lb
	MVS20B	192552042291	LOW CEILING LOW VOLTAGE MVS SENSOR BLACK	0.10 lb
	MVS20B/LCB	192552042277	LC BLUE LOW CEILING LOW VOLT LUMINAIRE CONTROLLER WITH MVS BLACK	0.10 lb

VAN17, 3-Way Adjustable Canopy Light

PERFORMANCE

VAN17: 8" x 8"

VAN17-30	3000K	4000K	5000K	3000K	4000K	5000K	3000K	4000K	5000K
WATTAGE		30W			25W			20W	
INPUT WATTS	29.8W	28.8W	29.7W	25W	24.4W	25W	20.4W	19.9W	20.4W
LUMENS	4,198	4,410	4,453	3,520	3,671	3,736	2,883	2,982	3,069
EFFICACY	140.9	153.1	149.9	140.8	150.5	149.4	141.3	149.8	150.4
CRI	82	83	81	82	83	81	82	83	81
VOLTAGE RATINGS		120-277V			120-277V			120-277V	

VAN17-50	3000K	4000K	5000K	3000K	4000K	5000K	3000K	4000K	5000K
WATTAGE		50W			40W			30W	
INPUT WATTS	49.1W	47.4W	49W	40.3W	38.8W	39.8W	30.1W	29.3W	29.9W
LUMENS	6,660	7,119	7,060	5,573	5,849	5,862	4,219	4,407	4,481
EFFICACY	135.6	150.2	144.1	138.3	150.7	147.3	140.2	150.4	149.9
CRI	81	83	80	81	83	80	82	83	81
VOLTAGE RATINGS		120-277V			120-277V			120-277V	

VAN17: 10" x 10"

VAN17-60	3000K	4000K	5000K	3000K	4000K	5000K	3000K	4000K	5000K
WATTAGE		60W			50W			40W	
INPUT WATTS	59.9W	57.4W	59.7W	49.6W	47.8W	49.5W	40W	38.8W	40W
LUMENS	8,110	8,806	8,668	6,916	7,444	7,397	5,736	6,098	6,129
EFFICACY	135.4	153.4	145.2	139.4	155.7	149.4	143.4	157.2	153.2
CRI	82	83	81	82	83	81	82	83	81
VOLTAGE RATINGS		120-277V			120-277V			120-277V	

VAN17-90	3000K	4000K	5000K	3000K	4000K	5000K	3000K	4000K	5000K
WATTAGE		90W			80W			70W	
INPUT WATTS	88.5W	85.2W	87.5W	78.7W	76W	77.8W	69.3W	67.3W	68.7W
LUMENS	12,011	12,929	12,556	10,849	11,651	11,368	9,726	10,396	10,208
EFFICACY	135.7	151.7	143.5	137.9	153.3	146.1	140.3	154.5	148.6
CRI	83	85	83	83	85	84	83	85	84
VOLTAGE RATINGS		120-277V			120-277V			120-277V	

ORDERING MATRIX

VAN17

Family	Wattage/Size	Color Temperature	Finish	Voltage	Options
VAN17 -					
	30 30/25/20W (8" x 8")	**BLANK** 3000/4000/5000K CCT Adjustable	**BLANK** Bonze	**BLANK** 120-277V, 0-10V Dimming, On/Off Photocell	**BLANK** Standard
	50 50/40/30W (8" x 8")		**W** White		**/E** Battery Backup
	60 60/50/40W (10" x 10")				
	90 90/80/70W (10" x 10")				