X34SW



Color: White

Weight: 1.2 lbs

Project:	**Type:**
Prepared By:	**Date:**

Driver Info

Type	Constant Current
120V	0.30A/0.22A/0.18A
208V	N/A
240V	N/A
277V	0.13A/0.10A/0.08A
Input Watts	19.6-33.6W

LED Info

Watts	35/25/20W
Color Temp	3000K/4000K/5000K
Color Accuracy	81-84 CRI
L70 Lifespan	100,000 Hours
Lumens	2,685-4,677 lm
Efficacy	121.5-150.9 lm/W

Technical Specifications

Field Adjustability

Field Adjustable:
Field Adjustable Light Output:
35W/25W/20W (factory default 35W)
Color temperature selectable 3000K, 4000K and 5000K (factory default 4000K)

Compliance

UL Listed:
Suitable for wet locations

IESNA LM-79 & LM-80 Testing:
RAB LED luminaires and LED components have been tested by an independent laboratory in accordance with IESNA LM-79 and LM-80.

IP Rating:
Ingress protection rating of IP65 for dust and water

Trade Agreements Act Compliant:
This product is a product of Cambodia and a "designated country" end product that complies with the Trade Agreements Act

DLC Listed:
This product is on the Design Lights Consortium (DLC) Qualified Products List and is eligible for rebates from DLC Member Utilities. Designed to meet DLC 5.1 requirements.
DLC Product Code: S-T9KEIS

Electrical

Driver:
Constant Current, Class 1, 120/277V, 50/60 Hz
35W: 120V: 0.30A, 277V: 0.13A
25W: 120V: 0.22A, 277V: 0.10A
20W: 120V: 0.18A, 277V: 0.08A

THD:
35W: 4.3% at 120V, 8.2% at 277V
25W: 5.0% at 120V, 16.8% at 277V
20W: 6.1% at 120V, 20.5% at 277V

Power Factor:
35W: 99.7% at 120V, 96.2% at 277V
25W: 99.7% at 120V, 91.7% at 277V
20W: 99.4% at 120V, 90.6% at 277V

Surge Protection:
2kV

Optical

NEMA Type:
NEMA Beam Spread of 7H x 7V

LED Characteristics

LEDs:
Long-life, high-efficacy, surface-mount LEDs

Color Uniformity:
RAB's range of Correlated Color Temperature follows the guidelines of the American National Standard for Specifications for the Chromaticity of Solid State Lighting (SSL) Products, ANSI C78.377-2017.

Performance

Lifespan:
100,000-Hour LED lifespan based on IES LM-80 results and TM-21 calculations

Wattage Equivalency:
35W: Replaces up to 150W Metal Halide (MH) or 100W High Pressure Sodium (HPS)
25W: Replaces up to 100W Metal Halide (MH) or 70W High Pressure Sodium (HPS)
20W: Replaces up to 100W Metal Halide (MH) or 70W High Pressure Sodium (HPS)

Construction

Cold Weather Starting:
The minimum starting temperature is -40°C (-40°F)

Maximum Ambient Temperature:
Suitable for use in up to 40°C (104°F)

Housing:
Die-cast aluminum

Copyright © 2024 RAB Lighting All Rights Reserved Note: Specifications are subject to change at any time without notice

Technical Specifications (continued)

Mounting:
Knuckle mount

Lens:
Glass

Reflector:
Polycarbonate

Finish:
Formulated for high durability and long-lasting color

Green Technology:
Mercury and UV free. RoHS-compliant components.

Other

Note:
All values are typical (tolerance +/- 10%)

5 Yr Limited Warranty:
The RAB 5-year, limited warranty covers light output, driver performance and paint finish. RAB's warranty is subject to all terms and conditions found at rablighting.com/warranty.

Buy American Act Compliance:
RAB values USA manufacturing! Upon request, RAB may be able to manufacture this product to be compliant with the Buy American Act (BAA). Please contact customer service to request a quote for the product to be made BAA compliant.

Dimensions

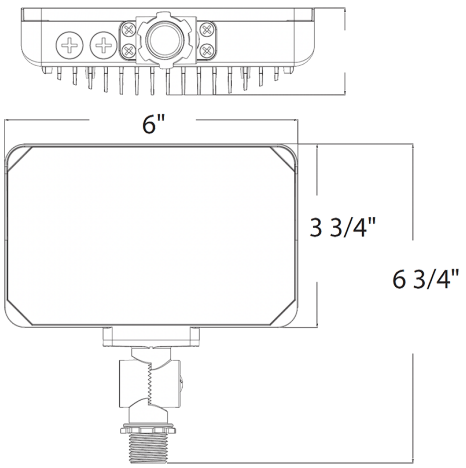

Features

- 100,000-Hour LED lifespan
- IP65 Rated
- 5-Year, limited warranty

Copyright © 2024 RAB Lighting All Rights Reserved Note: Specifications are subject to change at any time without notice

Ordering Matrix

Family	Wattages	Mounting	Color Temp	Finish	Driver
X34	S			W	
	XS = 16/13/10W **S =** 35/25/20W **M =** 65/55/45W	**Blank =** Knuckle	**Blank =** 3000K/4000K/5000K CCT Adjustable	**Blank =** Bronze **W =** White	**Blank =** 120V/277V

Copyright © 2024 RAB Lighting All Rights Reserved Note: Specifications are subject to change at any time without notice