INSTRUCTIONS
FIELD-ADJUSTABLE VAN17™ INSTALLATION

RAB Lighting is committed to creating high-quality, affordable, well-designed and energy-efficient LED lighting and controls that make it easy for electricians to install and end users to save energy. We'd love to hear your comments. Please call the Marketing Department at 888-RAB-1000 or email: marketing@rablighting.com



VAN17-30
VAN17-50



VAN17-60
VAN17-90

IMPORTANT

READ CAREFULLY BEFORE INSTALLING FIXTURE. RETAIN THESE INSTRUCTIONS FOR FUTURE REFERENCE.
RAB fixtures must be wired in accordance with the National Electrical Code and all applicable local codes. Proper grounding is required for safety. THIS PRODUCT MUST BE INSTALLED IN ACCORDANCE WITH THE APPLICABLE INSTALLATION CODE BY A PERSON FAMILIAR WITH THE CONSTRUCTION AND OPERATION OF THE PRODUCT AND THE HAZARDS INVOLVED.
WARNING: Make certain power is OFF before installing or maintaining fixture. No user serviceable parts inside.

CEILING MOUNTING *(WITH JUNCTION BOX)*

1. Use **Screws** provided to install the **Mounting Plate** to the **Junction Box** *(by others)* as shown in Fig. 1.
2. Feed fixture wires through the **Mounting Plate** to make electrical splices in the **Junction Box**. Use appropriate UL approved wire connectors as required by code to complete wiring (Fig. X). Tuck wires into the **Junction Box**, be careful not to pinch wires.
3. Raise fixture to the **Mounting Plate** and slide the **Fixture Tabs** *(4)* into the **Mounting Plate Slots** *(4)* to hold the fixture to the **Mounting Plate**. Secure the fixture to the **Mounting Plate** by installing **Retaining Arm Screw** into the fixture as shown in Fig. 1.

Fig: 1

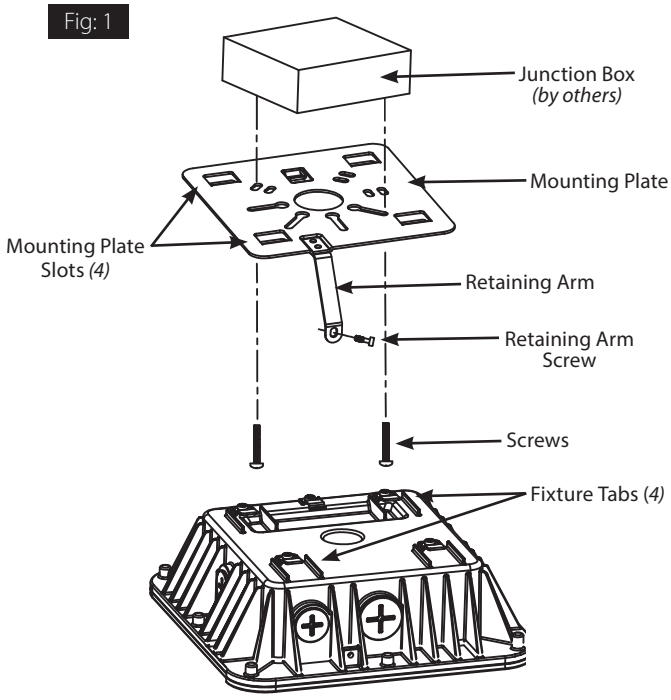

INSTRUCTIONS
FIELD-ADJUSTABLE VAN17™ INSTALLATION

RAB Lighting is committed to creating high-quality, affordable, well-designed and energy-efficient LED lighting and controls that make it easy for electricians to install and end users to save energy. We'd love to hear your comments. Please call the Marketing Department at 888-RAB-1000 or email: marketing@rablighting.com

MOUNTING PLATE DRILL LOCATION

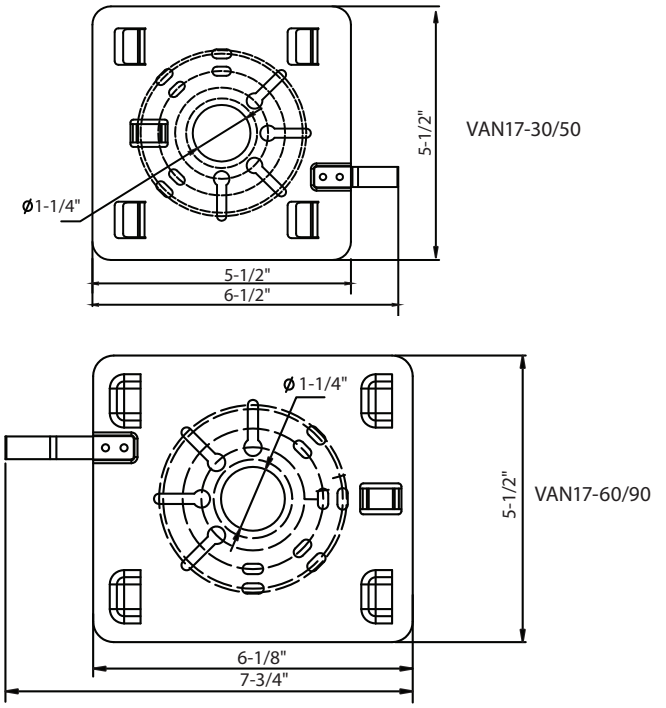

PENDANT MOUNTING

1. Thread fixture wires through **3/4" NPT Pendant Stem** *(by others)*. Thread the **Pendant Stem** into the fixture, use silicone or Teflon® tape on pendant threads for weather proof installation *(Fig. 2)*. Secure with Locking Nut.
2. Connect fixture wires to power supply by using UL approved connectors, see wiring diagram as shown in Fig. 2.
3. Use silicone or Teflon® tape on all plugs and on the threads of all conduit entry points.

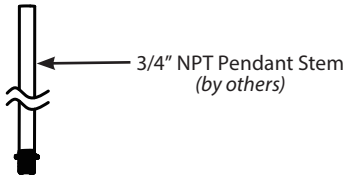

Fig: 2

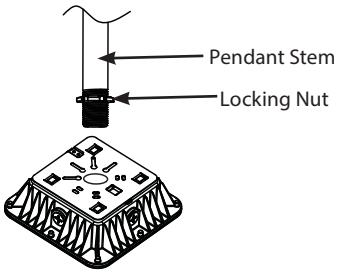

RETRO PLATE MOUNTING

Retro Plate sold separately, CAT# VAN17PLATE and VAN17PLATE-W)

1. Install **Junction Box** *(by others)* with power supply wires to the **Retro Plate** and the fixture **Mounting Plate** using provided hardware *(Fig. 3)*.
2. Install **Retro Plate** with **Junction Box** and fixture **Mounting Plate** to the mounting surface.
3. Feed fixture wires through the **Mounting Plate** to make electrical splices on the ceiling. Use appropriate UL approved wire connectors as required by code to complete wiring (Fig. X) Tuck wires into the **Junction Box**
   Be careful not to pinch wires.
4. Raise fixture to the **Mounting Plate** and slide the **Fixture Tabs** *(4)* into the **Mounting Plate Slots** *(4)* to hold the fixture to the **Mounting Plate**. Secure the fixture to the **Mounting Plate** by installing **Retaining Arm Screw** into the fixture as shown in Fig. 3.

Fig: 3

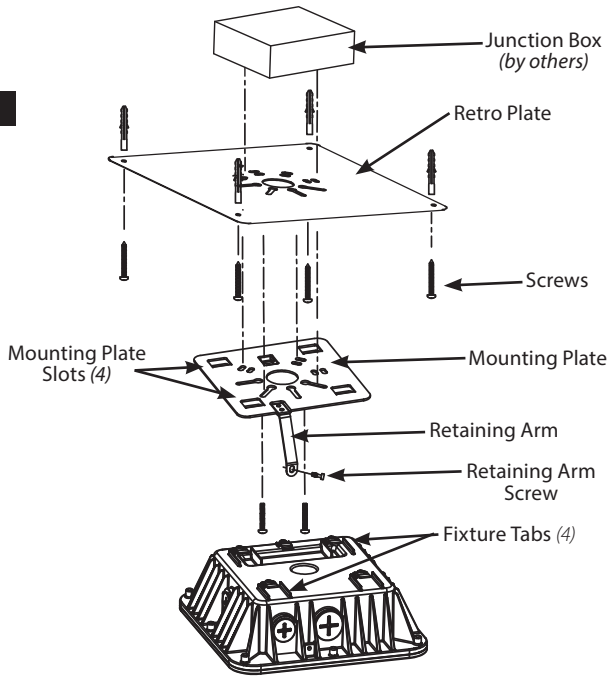

RETRO PLATE DRILL LOCATION

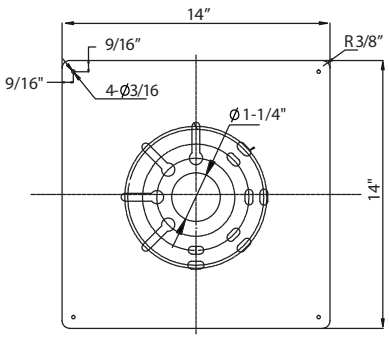

INSTRUCTIONS
FIELD-ADJUSTABLE VAN17™ INSTALLATION

RAB Lighting is committed to creating high-quality, affordable, well-designed and energy-efficient LED lighting and controls that make it easy for electricians to install and end users to save energy. We'd love to hear your comments. Please call the Marketing Department at 888-RAB-1000 or email: marketing@rablighting.com

FIELD ADJUSTMENT

Follow instructions below to change the fixture Power ***(W),*** Color Temperature *(CCT)* and/or Photocell ON/OFF function from factory setting:

Factory Settings:

VAN17-30: 30W/4000K Photocell/***OFF***
VAN17-50: 50W/4000K Photocell/***OFF***
VAN17-60: 60W/4000K Photocell/***OFF***
VAN17-90: 90W/4000K Photocell/***OFF***

1. Locate the Field Adjustable Switches on Fixture Housing as shown in Fig. 4 and remove gasketed **Threaded Plug**.
2. Select Power *(W)*, Color Temperature *(CCT)* and/or Photocell ON/OFF function by sliding respective switch to the desired value *(Fig. 5)*. Re-install gasketed **Threaded Plug.**

Warning: Photo eye, DO NOT OPEN.

Fig: 4

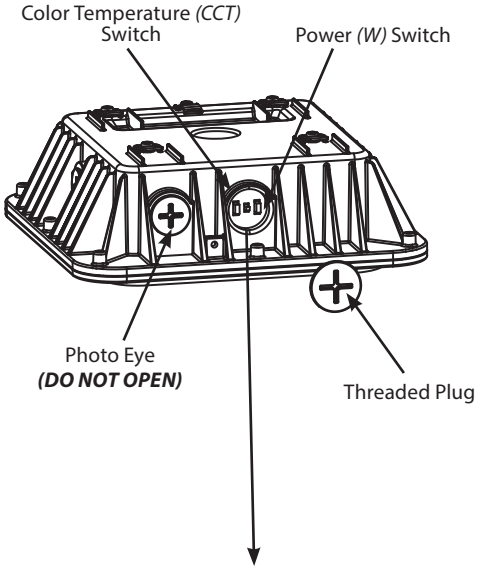

Fig: 5

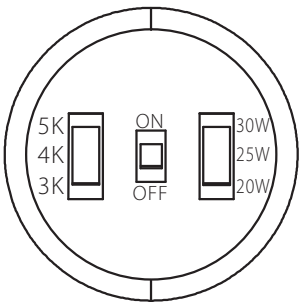

WIRING DIAGRAM

Universal voltage driver permits operation at 120V through 277V, 50 or 60 Hz. For 0-10V dimming follow the wiring directions as shown in **Fig 6**.

1. Connect the black fixture lead to the **LINE** supply lead.
2. Connect the white fixture lead to the **COMMON** supply lead.
3. Connect the **GROUND** wire from fixture to supply ground. ***DO NOT*** connect the **GROUND** of the dimming fixture to the output.
4. Connect the purple fixture lead to the **(V+) DIM** lead.
5. Connect the pink fixture lead to the **(V-) DIM** lead.
6. Cap the yellow fixture lead, if present. ***DO NOT*** connect.

Fig: 6

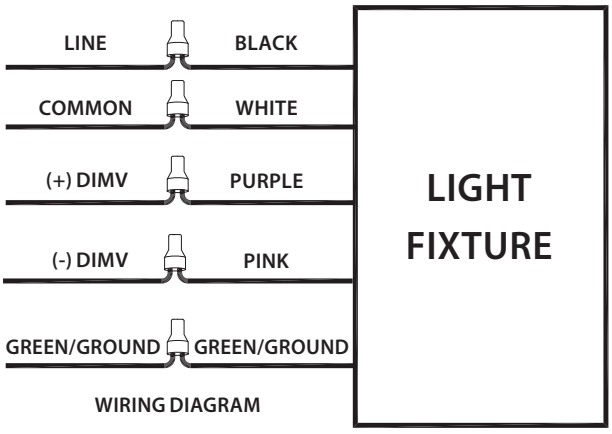

MOTION SENSOR INSTALLATION

(MVS OR PIR PURCHASED SEPARATELY)

1. Ensure power is off to the fixture to avoid risk of shock.
2. Remove MVS/PIR Sensor **Pin Protector** before installing as shown below.
3. Remove the **½" Threaded Plug** and install the **Sensor Kit** into fixture ***(Fig. 7)*** as per **Sensor Kit** instructions.
4. Make sure fixture **Photocell** switch is in the **OFF** position when using an **MVS** or **PIR** sensor.

Fig: 7

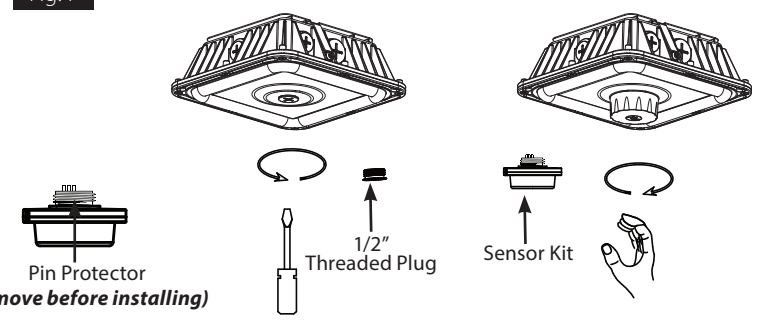

INSTRUCTIONS
FIELD-ADJUSTABLE VAN17™ INSTALLATION

RAB Lighting is committed to creating high-quality, affordable, well-designed and energy-efficient LED lighting and controls that make it easy for electricians to install and end users to save energy. We'd love to hear your comments. Please call the Marketing Department at 888-RAB-1000 or email: marketing@rablighting.com

BATTERY BACKUP MODELS

WIRING

CAUTION: FOR BATTERY BACKUP FIXTURE. Voltage could be present in **BATTERY**. To prevent high voltage from being present on output leads, inverter connector must be open. Battery is factory connected internally.

NOTE: Make sure that the necessary branch circuit wiring is available. An **UNSWITCHED AC** source of power is required. The emergency driver must be fed from the same branch circuit as the LED driver. **CAUTION: Do not use any supply voltage other than 120-277V 50/60 HZ** *(Fig. 8)*.

1. Connect **UNSWITCHED HOT** fixture lead to **HOT AC** supply line.
2. If using an **UNSWITCHED** circuit, connect **UNSWITCHED** and **SWITCHED** lines together.
3. If using a **SWITCHED** circuit, connect **SWITCHED HOT AC** fixture lead to the external **SWITCHED**.
4. Connect the **NEUTRAL** fixture lead to the **NEUTRAL** supply line.
5. For 0-10V dimming, connect **DIM (+)** and **DIM (-)** to the supply DIM (+) and DIM (-).
6. Connect **GROUND** lead from the fixture to the supply ground. Do not connect **GROUND** to the output leads.
7. All unused lead must be capped and insulated.
8. After installation is complete, supply AC power to the fixture.
9. When power is on, the fixture should be on and the **Charging Indicator Light** should illuminate to indicate the battery is charging.
10. Once the **BATTERY** has charged for at least one hour, a short duration test may be performed by pressing the **Test Button** *(Fig. 9)*.
11. After the battery has charged for 24 hours, a long duration test can be performed by shutting power to the fixture.

Fig: 8

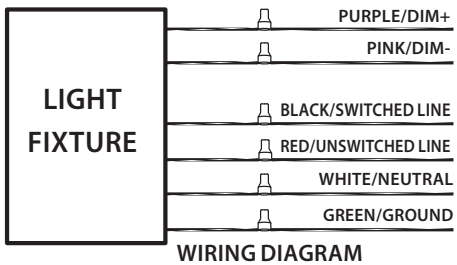

WIRING DIAGRAM

OPERATION

1. When AC power is applied, the charging indicator light is illuminated, indicating that the **BATTERY** is being charged.
2. When power fails, the standby power automatically switches to emergency power *(internal battery)*, operating at reduced illumination. The emergency driver supplies power in standby power for a minimum of 90 minutes.
3. When AC power is restored, the emergency driver automatically returns to charging mode.

MAINTENANCE

Although no routine maintenance is required to keep the emergency driver functional, it should be checked periodically to ensure that it is working. The following schedule is recommended:

1. Visually inspect the charging indicator light monthly. It should be illuminated.
2. Test the emergency operation of the fixture at 30-day intervals for a minimum of 30 seconds.
3. Conduct a 90-minute discharge test once a year. Fixture would operate at reduced illumination for a minimum of 90 minutes.

TROUBLESHOOTING

1. Be sure the fixture is grounded properly.
2. If the charging indicator light does not illuminate after pressing and releasing the **Test Button** ***(Fig. 9)***, check power.

Fig: 9

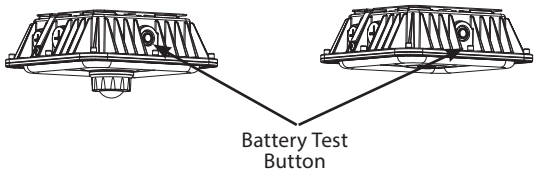

Note: *These instructions do not cover all details or variations in equipment nor do they provide for every possible situation during installation, operation or maintenance.*

© 2023 RAB LIGHTING Inc.
VAN17 - IN - 1123
P-100711

Easy Answers

rablighting.com	Tech Help Line	e-mail	Free Lighting Layouts
Visit our website for product info	Call our experts: 888 722-1000	Answered promptly - sales@rablighting.com	Answered online or by request

RAB WARRANTY: *RAB's warranty is subject to all terms and conditions found at rablighting.com/warranty* ***PATENT:*** *Patent information can be found at rablighting.com/ip*