INSTRUCTIONS
VANLED® INSTALLATION

RAB Lighting is committed to creating high-quality, affordable, well-designed and energy-efficient LED lighting and controls that make it easy for electricians to install and end users to save energy. We'd love to hear your comments. Please call the Marketing Department at 888-RAB-1000 or email: marketing@rablighting.com

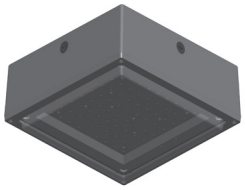

VANLED - Drop Lens

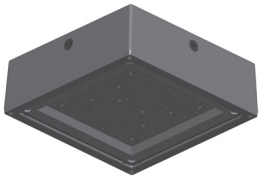

VANLED - Flat Lens

IMPORTANT

READ CAREFULLY BEFORE INSTALLING FIXTURE. RETAIN THESE INSTRUCTIONS FOR FUTURE REFERENCE.
RAB fixtures must be wired in accordance with the National Electrical Code and all applicable local codes. Proper grounding is required for safety. THIS PRODUCT MUST BE INSTALLED IN ACCORDANCE WITH THE APPLICABLE INSTALLATION CODE BY A PERSON FAMILIAR WITH THE CONSTRUCTION AND OPERATION OF THE PRODUCT AND THE HAZARDS INVOLVED.
WARNING: Make certain power is OFF before installing or maintaining fixture. No user serviceable parts inside.
CAUTION: For proper weatherproof function all gaskets must be seated properly and all screws inserted and tightened firmly. Apply weatherproof silicone sealant around the edge of the Ceiling Mounting Box and/or Junction Box. This is especially important with an uneven ceiling surface. Silicone all plugs and unused conduit entries.

CEILING MOUNTING

The fixture is suitable for outdoor applications in wet locations.

1. Remove **Door** by loosening *(4)* **Captive Screws**.
2. Remove **Reflector/ LED Assembly** by loosening *(4)* **Reflector/ LED Screws**.
3. Hang **Reflector/ LED Assembly** by **Tether Cable**.
4. Knock out appropriate **Slots** as marked in Fig. 2, by loosening **Screws** *(2)* on **Access Plate** and secure to junction box *(not supplied)*. Check gasket is fully sealed.
5. Mount **Ceiling Mounting Box** to ceiling by drilling out *(4)* **Drill Locations** as marked in Fig. 2. Use the appropriate mounting hardware for the mounting surface. Be sure gasket is properly seated.
6. Feed fixture wires through the **Access Plate** or through one of the **Plugs** *(4)* to make electrical splices in junction box. Use appropriate UL approved wire connectors as required by code to complete wiring.
7. Re-assemble **Reflector/ LED Assembly** and **Door.** Be careful not to pinch wires.
8. Tighten all screws.
9. Use silicone or Teflon tape on all **Plugs** and on the threads of all conduit entry points. If outdoor surface is irregular , use caulk to seal any gaps around **Ceiling Mounting Box.**

Fig: 1

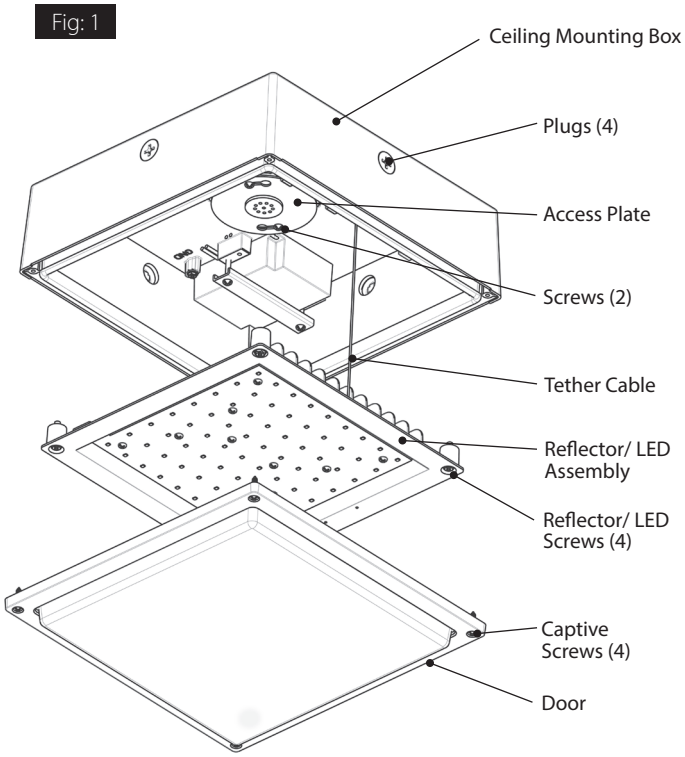

INSTRUCTIONS
VANLED® INSTALLATION

RAB Lighting is committed to creating high-quality, affordable, well-designed and energy-efficient LED lighting and controls that make it easy for electricians to install and end users to save energy. We'd love to hear your comments. Please call the Marketing Department at 888-RAB-1000 or email: marketing@rablighting.com

DRILL LOCATION

Fig. 2

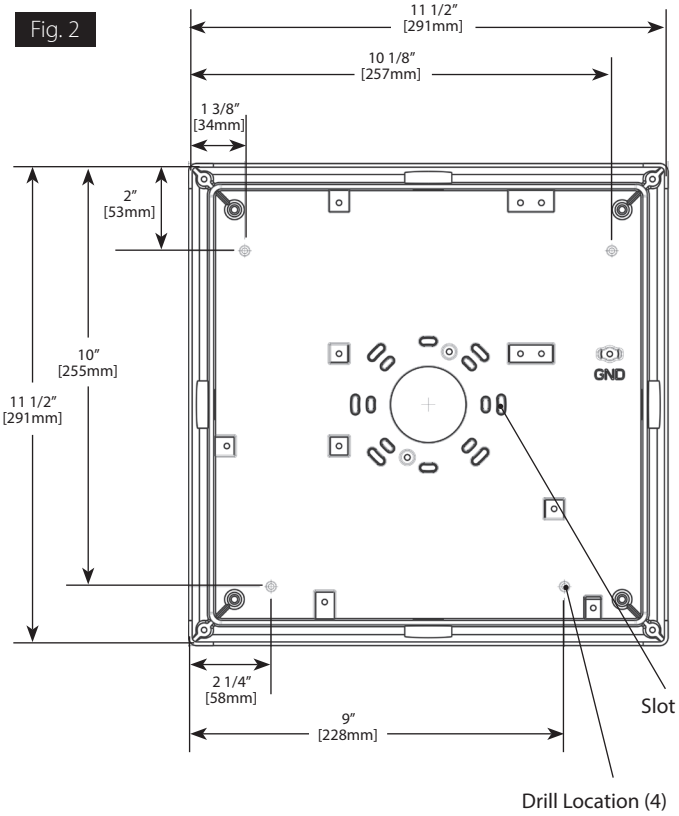

0-10V DIMMABLE WIRING

Universal voltage driver permits operation at 120V thru 277V, 50 or 60 Hz. Units ordered with (/480V) suffix are 480V, 50Hz or 60Hz. For 0-10V Dimming, follow the wiring directions as shown in Fig. 4.

1. Connect the black fixture lead to the **LINE** supply lead.
2. Connect the white fixture lead to the **COMMON** supply lead.
3. Connect the **GROUND** wire from fixture to supply ground. Do NOT connect the **GROUND** of the dimming fixture to the output.
4. Connect the purple fixture lead to the (V+) DIM lead.
5. Connect the pink *(or gray)* fixture lead to the (V-) DIM lead.
6. Cap the yellow fixture lead, if present. Do NOT connect.

Fig. 4

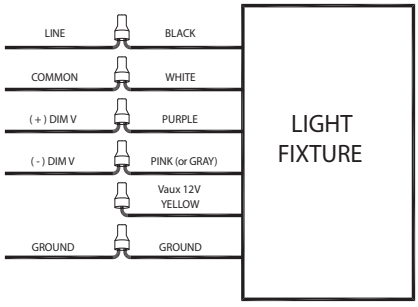

TROUBLESHOOTING

1. Check that the line voltage at the fixture is correct. Refer to wiring directions.
2. Be sure the fixture is grounded properly.
3. Is the photocell, if used, functioning properly?

CLEANING & MAINTENANCE

CAUTION: Be sure fixture temperature is cool enough to touch. Do not clean or maintain while fixture is energized.

1. Clean polycarbonate lens with non-abrasive cleaning solution.
2. Do not open the fixture to clean the LEDs. Do not touch the LEDs.

Note: *These instructions do not cover all details or variations in equipment nor do they provide for every possible situation during installation, operation or maintenance.*

INSTRUCTIONS
VANLED® INSTALLATION

RAB Lighting is committed to creating high-quality, affordable, well-designed and energy-efficient LED lighting and controls that make it easy for electricians to install and end users to save energy. We'd love to hear your comments. Please call the Marketing Department at 888-RAB-1000 or email: marketing@rablighting.com

BATTERY BACKUP MODELS

WIRING

CAUTION: FOR BATTERY BACKUP FIXTURE. Voltage can be present in **BATTERY.** To prevent high voltage from being present on output leads, Inverter connector must be open. Do not join **BATTERY** connector until installation is complete and AC power is supplied to the emergency driver *(Fig. 5)*.
NOTE: Make sure that the necessary branch circuit wiring is available. An UNSWITCHED AC source of power is required. The emergency driver must be fed from the same branch circuit as the LED driver.
CAUTION: Do not use any supply voltage other than 120-277V 50/60 HZ.

1. Connect **UNSWITCHED HOT** fixture lead to **HOT AC** supply line.
2. If using an **UNSWITCHED** circuit, connect **UNSWITCHED** and **SWITCHED** lines together.
3. If using a **SWITCHED** circuit, connect **SWITCHED HOT** AC fixture lead to the external.
4. Connect the pink *(or gray)* fixture lead to the (V-) DIM lead.
5. For 0-10V Dimming, connect **DIM** (+) and **DIM** (-) to the supply ground. Do not connect **GROUND** to the output leads.
6. All unused leads must be capped and insulated.
7. After installation is complete, supply AC power to the fixture and connect the **BATTERY.**
8. When power is on, the fixture should be on and the Charging Indicator Light should illuminate to indicate the battery is charging.
9. Once the BATTERY has charged for at least one hour, a short duration test may be performed by pressing the test button.
10. After the battery has charged for 24 hours, a long duration test can be performed by shutting power to the fixture.

OPERATION

1. When AC power is applied, the charging indicator light is illuminated, indicating that the **BATTERY** is being charged.
2. When power fails, the standby power automatically switches to emergency power *(internal battery)*, operating at reduced illumination. The emergency driver supplies 5W of power for VANLED 10W, 20W / 8W for VANLED 28W, 40W / 16W for VANLED 52W, 65W, 75W in standby power for a minimum of 90 minutes.
3. When AC power is restored, the emergency driver automatically returns to charging mode.

MAINTENANCE

Although no routine maintenance is required to keep the emergency driver functional, it should be checked periodically to ensure that it is working. The following schedule is recommended:

1. Visually inspect the charging indicator light monthly. It should be illuminated.
2. Test the emergency operation of the fixture at 30-day intervals for a minimum of 30 seconds.
3. Conduct a 90-minute discharge test once a year. Fixture would operate at reduced illumination for a minimum of 90 minutes.

TROUBLESHOOTING

1. Is the fixture grounded properly?
2. If the charging indicator light does not illuminate after pressing the test button, check if battery is connected properly.

FIG. 5

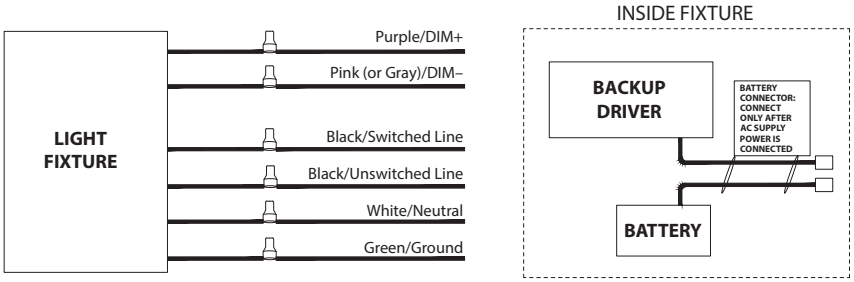

Note: *These instructions do not cover all details or variations in equipment nor do they provide for every possible situation during installation, operation or maintenance.*

© 2021 RAB LIGHTING Inc.

Easy Answers

rablighting.com	Tech Help Line	e-mail	Free Lighting Layouts
Visit our website for product info	Call our experts: 888 722-1000	Answered promptly - sales@rablighting.com	Answered online or by request

VANLED IN 1021
73141-RAB

RAB WARRANTY: *RAB's warranty is subject to all terms and conditions found at rablighting.com/warranty*