WP2FA40



Color: Bronze

Weight: 7.9 lbs

Project:	**Type:**
Prepared By:	**Date:**

Driver Info

Type	Constant Current
120V	0.33A
208V	0.19A
240V	0.17A
277V	0.15A
Input Watts	39.5/38.8/39.3W

LED Info

Watts	40W
Color Temp	3000K/4000K/5000K
Color Accuracy	81/83/82 CRI
L70 Lifespan	100,000 Hours
Lumens	5,392/5,749/5,535 lm
Efficacy	136.5/148.3/140.8 lm/W

Technical Specifications

Field Adjustability

Field Adjustable:
Color temperature selectable by 3000K, 4000K and 5000K

Compliance

UL Listed:
Suitable for wet locations

IESNA LM-79 & LM-80 Testing:
RAB LED luminaires and LED components have been tested by an independent laboratory in accordance with IESNA LM-79 and LM-80.

IP Rating:
Ingress protection rating of IP65 for dust and water

Performance

Lifespan:
100,000-Hour LED lifespan based on IES LM-80 results and TM-21 calculations

Wattage Equivalency:
Equivalent to 175W Metal Halide

LED Characteristics

LEDs:
Long-life, high-efficiency, surface-mount LEDs

Electrical

Driver:
Constant Current, Class 1, 120-277V, 50/60 Hz, 120V: 0.33A, 208V: 0.19A, 240V: 0.17A, 277V: 0.15A

Dimming Driver:
Driver includes dimming control wiring for 0-10V dimming systems. Requires separate 0-10V DC dimming circuit. Dims down to 10%.

THD:
6.41% at 120V, 14.5% at 277V

Power Factor:
98.9% at 120V, 89.7% at 277V

Photocell:
120-277V selectable photocell that can be turned on and off.

Construction

Cold Weather Starting:
The minimum starting temperature is -40°C (-40°F)

Maximum Ambient Temperature:
Suitable for use in up to 50°C (122°F)

Housing:
Die-cast aluminum

Lens:
Tempered glass

Finish:
Formulated for high durability and long-lasting color

Green Technology:
Mercury and UV free. RoHS-compliant components.

Other

Note:
All values are typical (tolerance +/- 10%)

5 Yr Limited Warranty:
The RAB 5-year, limited warranty covers light output, driver performance and paint finish. RAB's warranty is subject to all terms and conditions found at rablighting.com/warranty.

Buy American Act Compliance:
RAB values USA manufacturing! Upon request, RAB may be able to manufacture this product to be compliant with the Buy American Act (BAA). Please contact customer service to request a quote for the product to be made BAA compliant.

Installation

Mounting:
Wall mount

Copyright © 2024 RAB Lighting All Rights Reserved Note: Specifications are subject to change at any time without notice

WP2FA40

Dimensions

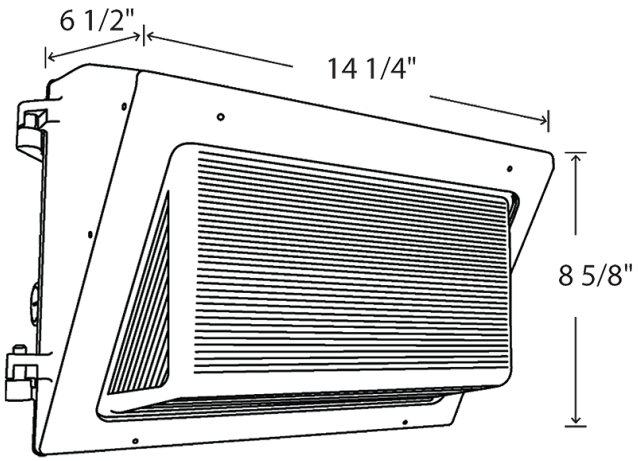

Features

- DLC Premium listed
- IP65 Rated
- 100,000-Hour LED lifespan
- 5-Year, limited warranty

Ordering Matrix

Family	Wattage	Color Temp	Finish	Voltage/Driver	Options
WP2FA	40				
	29 = 29W **40 =** 40W **60 =** 60W **80 =** 80W	**Blank =** 3000K/4000K/5000K	**Blank =** Bronze	**Blank =** 120-277V, 0-10V Dimming	**Blank =** Selectable Photocell **/LC =** Lightcloud Controller

Copyright © 2024 RAB Lighting All Rights Reserved Note: Specifications are subject to change at any time without notice