INSTRUCTIONS
FIELD-ADJUSTABLE W22™ INSTALLATION

RAB Lighting is committed to creating high-quality, affordable, well-designed and energy-efficient LED lighting and controls that make it easy for electricians to install and end users to save energy. We'd love to hear your comments. Please call the Marketing Department at 888-RAB-1000 or email: marketing@rablighting.com


W22-S-30


W22-M-60 / W22-M-100


W22-L-150

IMPORTANT

READ CAREFULLY BEFORE INSTALLING FIXTURE. RETAIN THESE INSTRUCTIONS FOR FUTURE REFERENCE.
RAB fixtures must be wired in accordance with the National Electrical Code and all applicable local codes. Proper grounding is required for safety. THIS PRODUCT MUST BE INSTALLED IN ACCORDANCE WITH THE APPLICABLE INSTALLATION CODE BY A PERSON FAMILIAR WITH THE CONSTRUCTION AND OPERATION OF THE PRODUCT AND THE HAZARDS INVOLVED.
WARNING: Make certain power is OFF before installing or maintaining fixture. No user serviceable parts inside.
Suitable for wet locations.
CAUTION: For proper weatherproof function all gaskets must be seated properly and all screws inserted and tightened firmly. Apply weatherproof silicone sealant around the edge of the Housing Back Plate where it meets the wall. This is especially important with an uneven mounting surface. Silicone all plugs and unused conduit entries.

MOUNTING

1. Loosen *(2)* Philip Screws on right side of housing as shown in Fig. 1.
2. Remove the Housing Back Plate *(Fig. 2)* by disconnecting connector between the driver and the LED board. Peel off the protective film on Foam Gasket and place onto the Housing Back Plate *(Fig. 2)*.
3. Mount Housing Back Plate with attached Foam Gasket to surface using the provided Junction Box Drill Pattern as shown in Fig. 3 and 4. Use a drill to open the mounting holes to the desired pattern. Wire the housing leads to supply wires using UL listed wire connectors according to NEC and local codes *(Fig. X)*. Push all wires into the Housing Black Plate.
4. For Conduit Entry, remove conduit cap using a screw driver *(Fig. 3)*. Feed supply wires through conduit opening with suitable connector *(by others)*. Wire the housing leads to supply wires using UL listed wire connectors according to NEC and local codes *(Fig. 9)*. Push all wires into the Housing Back Plate.
5. Replace the Front Housing onto the Hinge Pins *(Fig 3)* and reconnect the connector between the driver and LED board. Attach the Front Housing ground wire to the supply ground. Secure the Front Housing to the Housing Back Plate by tightening *(2)* Phillip Screws on the right side of housing as shown in Fig. 1. Be careful not to pinch any wires between the front and rear housings.

Fig: 1

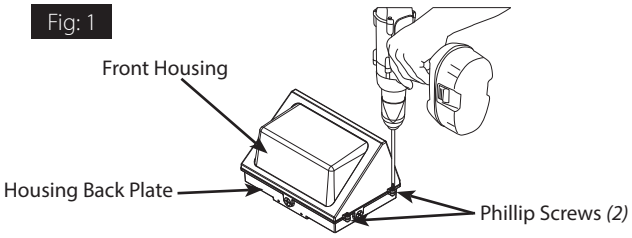

Fig: 2

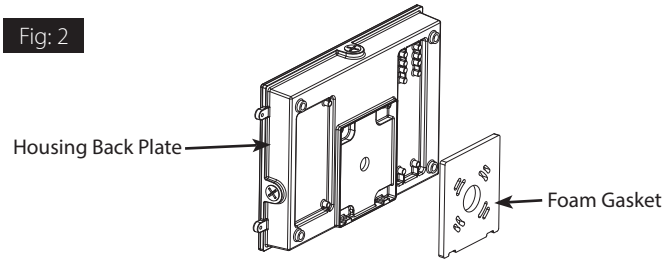

Fig: 3

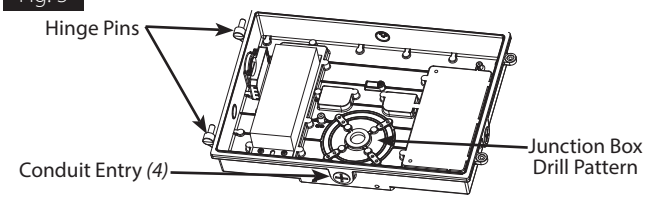

Fig: 4

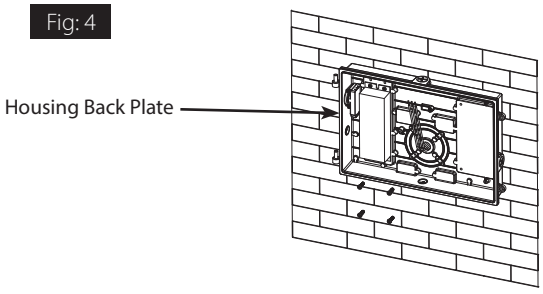

INSTRUCTIONS
FIELD-ADJUSTABLE W22™ INSTALLATION

RAB Lighting is committed to creating high-quality, affordable, well-designed and energy-efficient LED lighting and controls that make it easy for electricians to install and end users to save energy. We'd love to hear your comments. Please call the Marketing Department at 888-RAB-1000 or email: marketing@rablighting.com

FIELD ADJUSTMENT

Follow instructions below to change fixture Color Temperature ***(CCT),*** Power ***(W)*** and/or Photocell On/Off option from the factory settings:

Factory Settings: Max wattage, 4000K, Photocell/OFF

1. Locate **Selector Switches** on side of **Housing** as shown in Fig. 5. and remove **Selector Switch Cover Plug**.
2. Select Color Temperature ***(CCT),*** Power ***(W)*** and/or Photocell On/Off position by sliding the respective switch to the desired value *(Fig. 5)*.
3. Replace **Selector Switch Cover Plug**.

Fig: 5

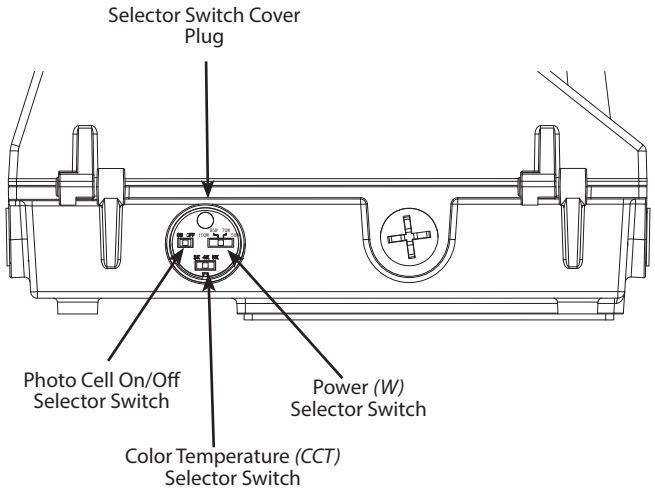

BEAM ANGLE ADJUSTMENT

Follow instructions below to change fixture **Beam/Optic Angle** to increase or reduce light angle. **Beam/Optic** selectable options are 0°/15°/30°/45°.

Factory Settings: 45°

1. Locate **Beam/Optic Angle Selector** on the side of **Housing** as shown in Fig. 6 and select desired **Beam/Optic Angle** using 5/16" Allen Wrench *(provided)*.

Fig: 6

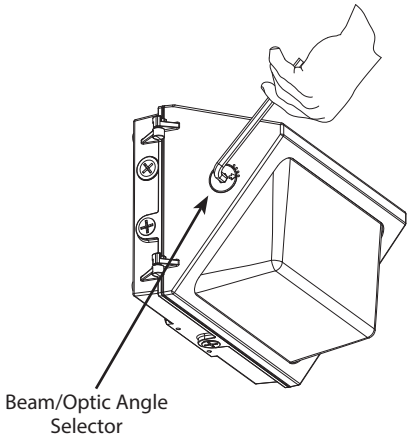

WIRE GUARD ACCESSORY

(Wire Guard Accessory, Model # W22-S-WG, W22-M-WG and W22-L-WG sold separately).

1. Align **Wire Guard** onto **Fixture** as shown in Fig. 7.
2. Secure **Wire Guard** to **Fixture** with *(4)* **Screws** *(provided)* as shown in Fig. 8.

Fig: 7

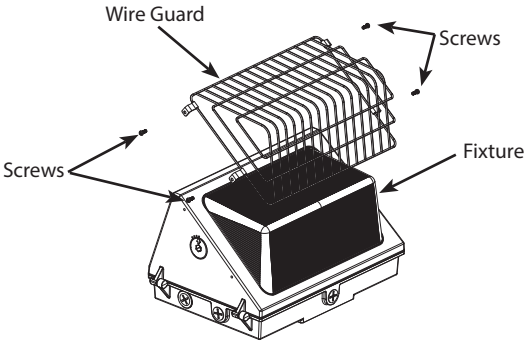

Fig: 8

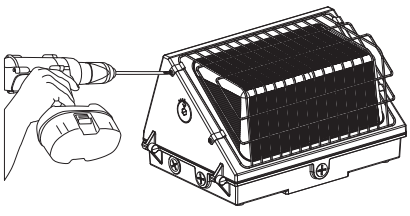

INSTRUCTIONS
FIELD-ADJUSTABLE W22™ INSTALLATION

RAB Lighting is committed to creating high-quality, affordable, well-designed and energy-efficient LED lighting and controls that make it easy for electricians to install and end users to save energy. We'd love to hear your comments. Please call the Marketing Department at 888-RAB-1000 or email: marketing@rablighting.com

0-10V DIMMABLE WIRING

Universal voltage driver permits operation at 120V through 277V, 50 or 60 Hz. Units ordered with /480 suffix are 480V, 50 or 60Hz **ONLY**. For 0-10V dimming follow the wiring directions as shown in Fig. 9.

1. Connect the black fixture lead to the **LINE** supply lead.
2. Connect the white fixture lead to the **COMMON** supply lead.
3. Connect the **GROUND** wire from fixture to supply ground.
4. Connect the purple fixture lead to the **(V+) DIM** lead.
5. Connect the pink fixture lead to the **(V-) DIM** lead.

NOTE: Do not connect DIM V+ (purple)/ DIM V- (pink) to line voltage or supply ground.

Fig: 9

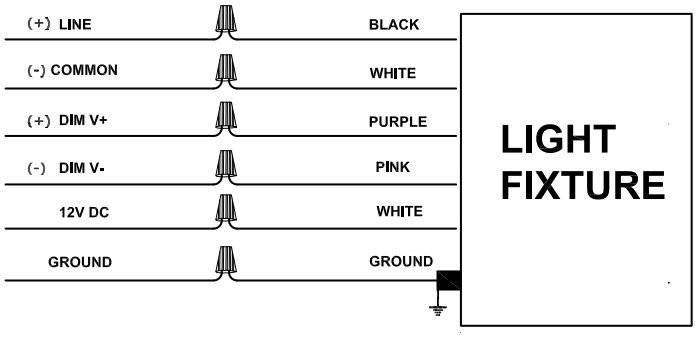

CLEANING & MAINTENANCE

CAUTION: Be sure fixture temperature is cool enough to touch. Do not clean or maintain while fixture is energized.

1. Do not open fixture to clean the LED. Do not touch the LED.
2. Clean lens with non-abrasive glass cleaning solution.

TROUBLESHOOTING

1. Check that the line voltage at the fixture is correct. Refer to wiring directions.
2. Is the fixture grounded properly?

Note: *These instructions do not cover all details or variations in equipment nor do they provide for every possible situation during installation, operation or maintenance.*

INSTRUCTIONS
FIELD-ADJUSTABLE W22™ INSTALLATION

RAB Lighting is committed to creating high-quality, affordable, well-designed and energy-efficient LED lighting and controls that make it easy for electricians to install and end users to save energy. We'd love to hear your comments. Please call the Marketing Department at 888-RAB-1000 or email: marketing@rablighting.com

BATTERY BACKUP MODELS

WIRING *(WS22-S)*

Note: W22-S (Small) Model has an external battery backup module as shown in Fig. 11.

CAUTION: FOR BATTERY BACKUP FIXTURE. Voltage can be present in **BATTERY.** To prevent high voltage from being present on output leads, Inverter connector must be open. Do not join **BATTERY** connector until installation is complete.

NOTE: Make sure that the necessary branch circuit wiring is available. An **UNSWITCHED AC** source of power is required. The emergency driver must be fed from the same branch circuit as the LED driver. Reference Fig.10 for wiring diagram. **CAUTION:** Do not use any supply voltage other than 120-277V, 50/60Hz.

1. Connect **UNSWITCHED HOT** fixture lead to **HOT AC** supply line.
2. If using an **UNSWITCHED** circuit, connect **UNSWITCHED** and **SWITCHED** lines together.
3. If using a **SWITCHED** circuit, connect **SWITCHED HOT** lead to the switch.
4. For 0-10V dimming, connect **DIM** (+) purple and **DIM** (-) pink leads to 0-10V dimming connection.
5. All unused leads must be capped and insulated.
6. When power is on, the fixture should be ON and the **CHARGING INDICATOR LIGHT** should illuminate to indicate the battery is charging.
7. Once the **BATTERY** has charged for at least one hour, a short duration test may be performed by pressing the **Test Button** as shown in Fig. 11.
8. After the battery has charged for 24 hours, a long duration test can be performed by disconnecting power to the fixture.

Fig: 10

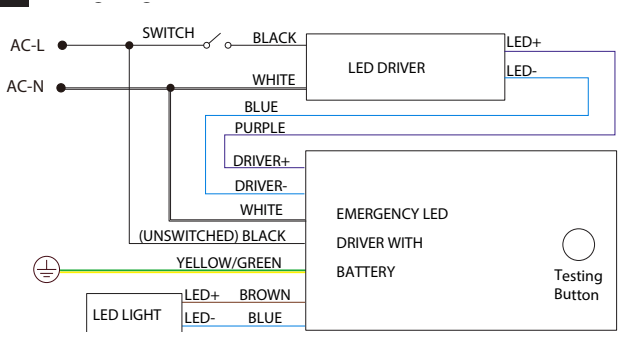

OPERATION

1. When AC power is applied the charging indicator light is illuminated indicating that the **BATTERY** is being charged.
2. When power fails the standby power automatically switches to emergency power operating at reduced illumination.
3. When AC power is restored the emergency driver automatically returns to charging mode.

MAINTENANCE

Although no routine maintenance is required to keep the emergency driver functional, it should be checked periodically to ensure that it is working. The following schedule is recommended:

1. Visually inspect the charging indicator light monthly. It should be illuminated
2. Test the emergency operation of the fixture at 30-day intervals for a minimum of 30 seconds.
3. Conduct a 90-minute discharge test once a year. Fixture would operate at reduced illumination for a minimum of 90 minutes.

TROUBLESHOOTING

1. Be sure the fixture is grounded properly.
2. If the charging indicator light does not illuminate after pressing and releasing the **Test Button** *(Fig. 11)*, check power and check if battery is connected properly.

W22-S External Battery Back-up Module

Fig: 11

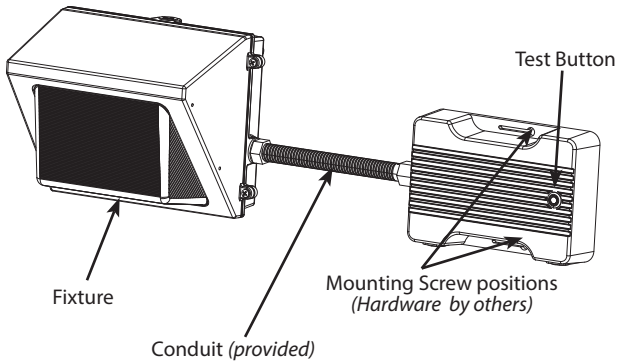

INSTRUCTIONS
FIELD-ADJUSTABLE W22™ INSTALLATION

RAB Lighting is committed to creating high-quality, affordable, well-designed and energy-efficient LED lighting and controls that make it easy for electricians to install and end users to save energy. We'd love to hear your comments. Please call the Marketing Department at 888-RAB-1000 or email: marketing@rablighting.com

WIRING *(W22-M, W22-L)*

Note: W22-M (Medium) and W22-L (Large) Models have an internal battery back up module.

CAUTION: FOR BATTERY BACKUP FIXTURE. Voltage can be present in **BATTERY.** To prevent high voltage from being present on output leads, Inverter connector must be open. Do not join **BATTERY** connector until installation is complete.

NOTE: Make sure that the necessary branch circuit wiring is available. An **UNSWITCHED AC** source of power is required. The emergency driver must be fed from the same branch circuit as the LED driver. Reference Fig.12 for wiring diagram. **CAUTION:** Do not use any supply voltage other than 120-277V, 50/60Hz.

1. Connect **UNSWITCHED HOT** fixture lead to **HOT AC** supply line.
2. If using an **UNSWITCHED** circuit, connect **UNSWITCHED** and **SWITCHED** lines together.
3. If using a **SWITCHED** circuit, connect **SWITCHED HOT** lead to the switch.
4. For 0-10V dimming, connect **DIM** (+) purple and **DIM** (-) pink leads to 0-10V dimming connection.
5. All unused leads must be capped and insulated.
6. When power is on, the fixture should be on and the **CHARGING INDICATOR LIGHT** should illuminate to indicate the battery is charging.
7. Once the **BATTERY** has charged for at least one hour, a short duration test may be performed by pressing the **Test Button** as shown in Fig. 13 located on bottom of the **Housing Back Plate**.
8. After the battery has charged for 24 hours, a long duration test can be performed by disconnecting power to the fixture.

Fig: 12

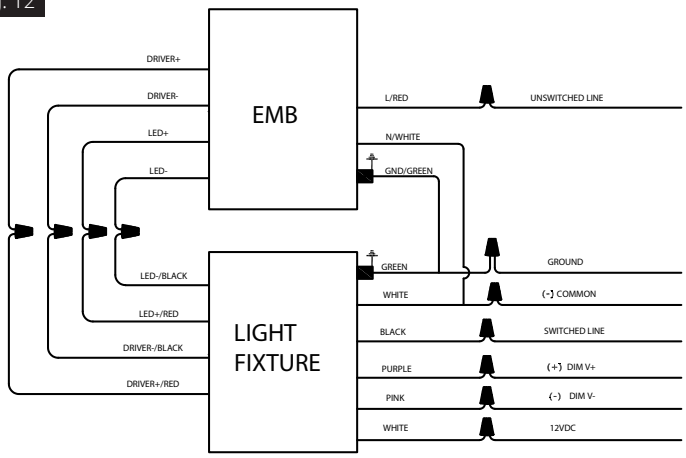

OPERATION

1. When AC power is applied the charging indicator light is illuminated indicating that the **BATTERY** is being charged.
2. When power fails the standby power automatically switches to emergency power *(internal battery)* operating at reduced illumination.
3. When AC power is restored the emergency driver automatically returns to charging mode.

MAINTENANCE

Although no routine maintenance is required to keep the emergency driver functional, it should be checked periodically to ensure that it is working. The following schedule is recommended:

1. Visually inspect the charging indicator light monthly. It should be illuminated
2. Test the emergency operation of the fixture at 30-day intervals for a minimum of 30 seconds.
3. Conduct a 90-minute discharge test once a year. Fixture would operate at reduced illumination for a minimum of 90 minutes.

TROUBLESHOOTING

1. Be sure the fixture is grounded properly.
2. If the charging indicator light does not illuminate after pressing and releasing the **Test Button** *(Fig. 13)*, check power and check if battery is connected properly.

Fig: 13

W22-M, W22-L Battery Backup

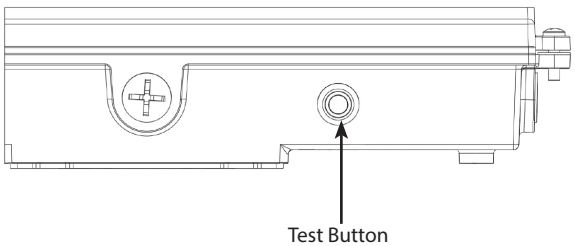

© 2024 RAB LIGHTING Inc.
W22 S-M-L 0124
P-100815

Easy Answers

rablighting.com
Visit our website for product info

Tech Help Line
Call our experts: 888 722-1000

e-mail
Answered promptly - sales@rablighting.com

Free Lighting Layouts
Answered online or by request

RAB WARRANTY: *RAB's warranty is subject to all terms and conditions found at rablighting.com/warranty.*